Last version of this manual

IP2450EN • 2025/12/18

SMART GO600
SMART GO1000

Automation for sectional doors

(Original instructions)

www.yalehome.com

GENERAL SAFETY PRECAUTIONS

WARNING! Important safety instructions • Please follow these instructions carefully • Failure to observe the information given in this manual may lead to severe personal injury or damage to the equipment • Keep these instructions for future reference • Keep children away when the door is moving.

WARNING! Automatic devices. The door may operate unexpectedly, therefore do not allow anything to stay in the path of the door • RISK OF ENTRAPMENT - When the door comes into contact with a 40 mm high object placed on the floor, it must be ensured that the motion of the door is reversed, or the object can be freed. If drive does not reverse or the object cannot be freed, call for authorized service.

WARNING! Disconnect power supply before any cleaning or maintenance operation.

This manual and those for any accessories can be downloaded from www.yalehome.com

GENERAL SAFETY PRECAUTIONS FOR THE USER

These precautions are an integral and essential part of the product and must be supplied to the user. Read them carefully since they contain important information on safe installation, use and maintenance. These instructions must be kept and forwarded to all possible future users of the system • This product must be used only for the specific purpose for which it was designed. Any other use is to be considered improper and therefore dangerous. The manufacturer cannot be held responsible for any damage caused by improper, incorrect or unreasonable use • Avoid operating in the proximity of the hinges or moving mechanical parts. Do not enter within the operating range of the motorized door while it is moving. Do not obstruct the motion of the motorized door, as this may cause a dangerous situation • Lock and release the door only when the motor is switched off. Do not enter within the action range of the door • In case of operation in "hold-to-run" ("dead man") mode, the corresponding command devices must be located so to have direct and complete view of the door during the maneuvers, away from any moving parts, at a minimum height of 1.5 m, and out of reach of the public • The motorized door may be used by children over the age of 8 and by people with reduced physical, sensorial or mental abilities, or lack of experience or knowledge, as long as they are properly supervised or have been instructed in the safe use of the device and the relative hazards • Children must be supervised to make sure they do not play with the device, nor play or remain in the area of action of the motorized door. Keep remote controls and/or any other command devices out of the reach of children, to avoid any accidental activation of the motorized door • Cleaning and maintenance work intended to be done by the end user must not be carried out by children unless they are supervised. In the event of a product fault or malfunction, disconnect the power cord. Do not attempt to repair or intervene directly. Any repair or technical intervention must be carried out by qualified personnel. Failure to comply with the above may cause a dangerous situation • To ensure that the system works efficiently and correctly, the manufacturer's indications must be complied with, and only qualified personnel must perform routine maintenance on the motorized door. In particular, regular checks are recommended in order to verify that the safety devices are operating correctly • All installation, maintenance and repair work must be documented and made available to the user • This appliance may contain batteries that are only replaceable by authorized service personnel. • If the power cord is damaged, it must be replaced by the manufacturer, its service agent or similarly qualified persons, in order to avoid a hazard • Activation of the manual release may cause uncontrolled movement of the door due to mechanical failure or an unbalanced condition • The A-weighted emission sound pressure level of the appliance is 70 dB(A) or less.

GENERAL SAFETY PRECAUTIONS FOR TECHNICAL PERSONNEL

This installation manual is intended for qualified personnel only • Installation, electrical connections and adjustments must be performed by qualified personnel, in accordance with Good Working Methods and in compliance with the current regulations • Read the instructions carefully before installing the product. Wrong installation could be dangerous • Before installing the product, make sure it is in perfect condition. The packaging materials (plastic, polystyrene, etc.) should not be discarded in the environment or left within reach of children, as they are a potential source of danger • Do not install the product in explosive areas and atmospheres: the presence of inflammable gas or fumes represents a serious safety hazard • Make sure that the temperature range indicated in the technical specifications is compatible with the installation site • Before installing the motorization device, make sure that the existing structure, as well as all the support and guide elements, are up to standards in terms of strength and stability. Verify the stability and smooth mobility of the guided part, and make sure that no risks of fall or derailment subsist. Make all the necessary structural modifications to create safety clearance and to guard or isolate all the crushing, shearing, trapping and general hazardous areas • The motorization device manufacturer is not responsible for failure to observe Good Working Methods when building the frames to be motorized, or for any deformation during use • The safety devices (photocells, safety edges, emergency stops, etc.) must be installed taking into account the applicable laws and directives, Good Working Methods, installation premises, system operating logic and the forces developed by the motorized door or gate • The safety devices must protect against crushing, cutting, trapping and general danger areas of the motorized door or gate. Display the signs required by law to identify hazardous areas • Each installation must bear a visible indication of the data identifying the motorized door or gate • Before connecting the power supply, make sure the plate data correspond to those of the mains power supply. For devices that are permanently connected to the mains supply, an omni polar disconnection switch with a contact opening distance of at least 3 mm must be fitted on the mains supply. Check that there is an adequate residual current circuit breaker and a suitable overcurrent cutout upstream of the electrical installation in accordance with Good Working Methods and with the laws in force • When requested, connect the motorized door or gate to an effective earthing system that complies with the current safety standards • The electronic parts must be handled using earthed antistatic conductive arms. The manufacturer of the motorization declines all responsibility if component parts not compatible with safe and correct operation are fitted • Only use original spare parts for repairing or replacing products • Before commissioning the installation to the end user, make sure that the automation is adequately adjusted in order to satisfy all the functional and safety requirements, and that all the command, safety, and manual release devices operate correctly • The installer must supply all information concerning the automatic, manual and emergency operation of the motorized door or gate, and must provide the user with the operation and safety instructions.

SPECIFIC SAFETY INDICATIONS FOR A CORRECT INSTALLATION

Make sure that the vertical door on which the operator will be installed is fitted with an anti-drop feature or device • Do not install the operator with doors having openings exceeding 50 mm in diameter or having edges or protruding parts a person could grip or stand on • If the garage door incorporates a pedestrian door (wicket door), it must be equipped with a safety device that prevents the operation of the garage door whenever the pedestrian door is not fully closed. This safety device must be connected to the EMERGENCY STOP • Manual release actuator members must be installed at a height less than 1.8 m • Garages without a second entrance must be equipped with an external emergency release device • When the operator track system is installed at a height of less than 2.5 m, the operation speed of the door must be set to a value not greater that 20 cm/s • When the door comes into contact with a 40 mm high object placed on the floor, it must be ensured that the motion of the door is reversed, or the object can be freed • If the door is intended to operate automatically in at least one direction, or is to be actuated in at least one direction by a command initiated via a connection to a communication or telecommunication network, a photocell must be installed across the door opening width, at a height such that it detects an obstacle with a height of 100 mm placed on the floor at any point of the door opening area, and avoids any movement of the door in the closing direction.

Declaration of incorporation of partly completed machinery
(Directive 2006/42/EC, Annex II-B)

We,
ASSA ABLOY Entrance Systems AB
Lodjursgatan 10
SE-261 44 Landskrona
Sweden

declare, under our sole responsibility, that the type of equipment with the name:

GO600 - GO1000 Residential garage door drives with radio remote control

complies with the following directives and their amendments:

2006/42/EC Machinery Directive (MD), regarding the following essential health and safety requirements: 1.1.2, 1.1.3, 1.2.1, 1.2.2, 1.2.3, 1.2.4.2, 1.2.6, 1.3.9, 1.4.3, 1.7.2, 1.7.3, 1.7.4, 1.7.4.1, 1.7.4.2.
2014/30/EU Electromagnetic Compatibility Directive (EMCD)
2014/53/EU Directive on Radio Equipment(RED)
2011/65/EU Restriction of Hazardous Substances (RoHS 2)
2015/863/EU Restriction of Hazardous Substances (RoHS Amendment 2)

Harmonised European standards which have been applied:

EN 60335-1:2012+A11:2014+A13:2017+A1:2019+A14:2019+A2:2019+A15:2021+A16:2023
EN 55014-1:2021 EN 55014-2:2021
ETSI EN 300 220-2 v3.2.1 ETSI EN 300 220-1 v3.1.1
ETSI EN 300 328 v2.2.2 ETSI EN 301 489-17 v3.2.4
ETSI EN 301 489-3 v2.3.2 ETSI EN 301 489-1 v.2.2.3
EN IEC 62311:2020 EN IEC 62368-1:2020+A11:2020

Other standards or technical specifications which have been applied:

EN IEC 60335-2-95:2023+A11:2023
EN IEC 60335-2-103:2023+A1:2023+A2:2023+A2:2023+A11:2023
EN 12453:2017+A1:2021 IEC 60335-1:2010+A1+A2
IEC 60335-2-95:2019 IEC 60335-2-103:2015+A1:2017+A2:2019
FCC CFR 47 - Part 15 Subpart B
ICES-003 Issue 7:2020

EC type examination or certificate issued by a notified or competent body (for full address, please contact ASSA ABLOY Entrance System AB) concerning the equipment. The manufacturing process guarantees that the equipment complies with the technical documentation.

Responsible for the technical documentation:

Matteo Fino
Doors and parts Germany GmbH
Am Söldnermoos 17
85399 Hallbergmoos
Germany

Signed on behalf of ASSA ABLOY Entrance Systems AB by:

Place	Date	Signature	Position
Origgio	2025/12/18	Matteo Fino	CEO Normstahl and Crawford

© ASSA ABLOY, All rights reserved

IP2450EN

UK Declaration of Conformity

We:
ASSA ABLOY Entrance Systems AB
Lodjursgatan 10
SE-261 44 Landskrona
Sweden

Declare under our sole responsibility that the types of equipment with names:

GO600 - GO1000 Residential garage door drives with radio remote control

complies with the following directives and their amendments:

- Supply of Machinery (Safety) Regulations 2016
- Electromagnetic Compatibility Regulations 2016
- Radio Equipment Regulations 2017
- The Restriction of the Use of Certain Hazardous Substances in Electrical and Electronic Equipment Regulations 2012 (RoHS)

Harmonized European standards that have been applied:

EN 60335-1:2012+A11:2014+A13:2017+A1:2019+A14:2019+A2:2019+A15:2021+A16:2023

EN 55014-1:2021	EN 55014-2:2021
ETSI EN 300 220-2 v3.2.1	ETSI EN 300 220-1 v3.1.1
ETSI EN 300 328 v2.2.2	ETSI EN 301 489-17 v3.2.4
ETSI EN 301 489-3 v2.3.2	ETSI EN 301 489-1 v.2.2.3
EN IEC 62311:2020	EN IEC 62368-1:2020+A11:2020

Other standards or technical specifications which have been applied:

EN IEC 60335-2-95:2023+A11:2023
EN IEC 60335-2-103:2023+A1:2023+A2:2023+A2:2023+A11:2023

EN 12453:2017+A1:2021	IEC 60335-1:2010+A1+A2
IEC 60335-2-95:2019	IEC 60335-2-103:2015+A1:2017+A2:2019

FCC CFR 47 - Part 15 Subpart B
ICES-003 Issue 7:2020

The manufacturing process ensures the compliance of the equipment with the technical file.

Responsible for technical file:

Matteo Fino
Doors and parts Germany GmbH
Am Söldnermoos 17
85399 Hallbergmoos
Germany

Signed on behalf of ASSA ABLOY Entrance Systems AB by:

Place	Date	Signature	Position
Origgio	2025/12/18	Matteo Fino	CEO Normstahl and Crawford

IP2450EN

© ASSA ABLOY, All rights reserved

INDEX

GENERAL SAFETY PRECAUTIONS 2
Declaration of incorporation of partly completed machinery 4
UK Declaration of Conformity 5
1. Technical data 7
2. Product description 8
3. Operating Instructions 8
4. Machinery Directive 8
5. Applications with generic sectional doors 9
6. Dimensions 11
7. Example of installation 12
8. Main components 13
9. Installation 14
9.1 Assembly guide 14
9.2 Tensioning the belt 15
9.3 Assembling the automation 16
9.4 Rail mechanical installation 17
9.5 Assembling and fastening the arm 21
9.6 Cables passage 22
10. Electrical connections 23
9.7 Warning labels and pictograms 23
10.1 LCU60E electronic board 24
10.2 Reports 25
11. Commands 25
12. Outputs and accessories 26
12.1 Wiring the accessories 27
13. Navigation buttons 31
14. Self-learning of the stroke 32
15. Memorizing / Deleting remote controls 34
15.1 Memorizing remote controls 34
15.2 Deleting remote controls 34
16. Using of the menus 35
16.1 Switching the display ON and OFF 35
16.2 Navigation keys 35
16.3 Shortcuts 36
16.3.1 Calibration reset 36
16.3.2 System restart 36
16.3.3 Radio remote control storage via control panel 36
16.3.4 Wi-fi reset 36
17. Parameters LCU60E 37
17.1 Main level menu 37
17.2 Frequent use menu map 37
17.4 Frequent use parameters description 40
17.5 Complete menu - parameters description 42
18. Alarms and faults 51
19. YALE GO and YALE Home App 53
20. Maintenance 54

Legend

This symbol indicates instructions or notes relating to safety which require special attention.

This symbol indicates useful information for the correct operation of the product.

Indicates the default parameters value

IP2450EN

1. Technical data

	GO600	GO1000
Power supply	100 - 240 V~, 50-60 Hz	
Power	100 W	150 W
Motor power supply	24 V	
Control panel	LCU60	
Total power supply for accessories	24 V⎓ / 0,3 A max 2 s 24 V⎓ / 0,15 A continuous	
Standby	< 0,6 W for AIR600B < 0,8 W for AIR1000B	Networked Equipment (unplugged accessories)
Thrust	Fmax: 600 N | Fnom: 180 N	Fmax: 1000 N | Fnom: 280 N
Opening speed	8-22 cm/s adjustable - 20 cm/s (Default)	
Closing speed	8-22 cm/s adjustable - 10 cm/s (Default)	
Maximum door area (✱)	12 m²	17 m²
Maximum door weight	130 kg	200 kg
Service class	**INTENSIVE** (tested up to 200,000 cycles)	
Intermittence	**S2**= 60 min (Ta= 50°C) **S3**= 75% (Ta= 50°C)	
Cycle/hour **	70 (Ta= 50°C)	
Continuous cycles **	100 (Ta= 50°C)	
Working temperature (T)	-20°C	+50°C
Working temperature with batteries (T)	0°C	+40°C
Degree of protection	IP20	
Noise level L_{PA}	<55 dB (A) (operator only)	
Remote control functions / programmable keys	Code BIXMR2	100= (P0 → MU → MU/ 10) 200= (P0 → MU → MU/ 20)
Radio frequency	**default -**	433.92 MHz (P0 → F0 → 43) 868.35 MHz (P0 → F0 → 86)
Maximum remote control range	50 m	
Courtesy light	Built in: LED 1750 lms	Built in: LED 3500 lms

**indicative cycles considering a 2350 mm high door and factory settings (default opening speed of 20 cm/s and closing speed of 10 cm/s). Speeds are configurable up to 22 cm/s. With higher speeds, the number of cycles increases. A cycle is considered an opening maneuver followed by a closing maneuver

✱ the maximum door area was calculated based on a weight of 10.9 kg/m²

	TS100X3 - TS150X2	TS100X4 - TS200X2
Track system length	3300 mm	4400 mm
Maximum carriage stroke	2875 mm	3975 mm
Maximum door height	2350 mm	3450 mm

2. Product description

The automation is suitable for use with balanced sectional doors, side doors and counterweighted overhead doors (with optional accessory).

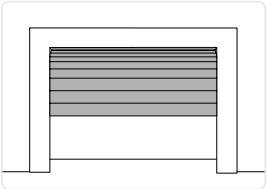

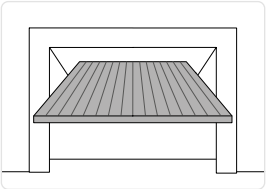

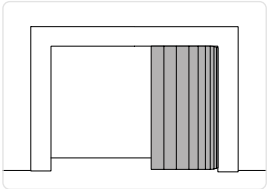

3. Operating Instructions

USE: For single-family/multi-family entrances with heavy use.

- The performance characteristics refer to the recommended weight (approx. 2/3 of the maximum permitted weight). When used with the maximum permitted weight, a reduction in the above mentioned performance levels can be expected.
- The service class, running times and number of consecutive cycles are merely indicative, having been statistically determined under average operating conditions and therefore not necessarily applicable to specific conditions of use.
- Each automatic entrance has variable elements such as friction, balancing and environmental factors, all of which may substantially alter the performance characteristics or working life of the entrance itself or its components (including the automatic devices). The installer should apply suitable safety conditions for each particular installation

4. Machinery Directive

Pursuant to Machinery Directive (2006/42/EC) the installer who automatize a door or gate has the same obligations as the manufacturer of machinery and as such must:

- prepare the technical file which must contain the documents indicated in Annex V of the Machinery Directive (The technical documentation must be kept and placed at the disposal of competent national authorities for at least ten years from the date of manufacture of the motorized door);
- draw up the EC Declaration of Conformity in accordance with Annex II-A of the Machinery Directive and deliver it to the customer;
- affix the EC marking on the motorized door in accordance with point 1.7.3 of Annex I of the Machinery Directive.

5. Applications with generic sectional doors

Maximum door dimensions - GO600 (max door weight = 130 kg)

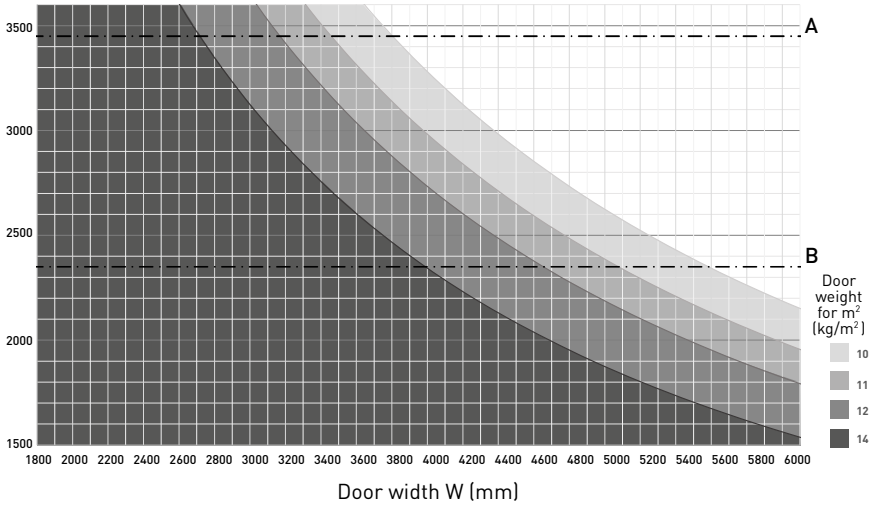

A - H max TS100X4 - TS200X2= 3450 mm | B - H max TS100X3 - TS150X2 = 2350 mm

Maximum door dimensions - GO1000 (max door weight = 200 kg)

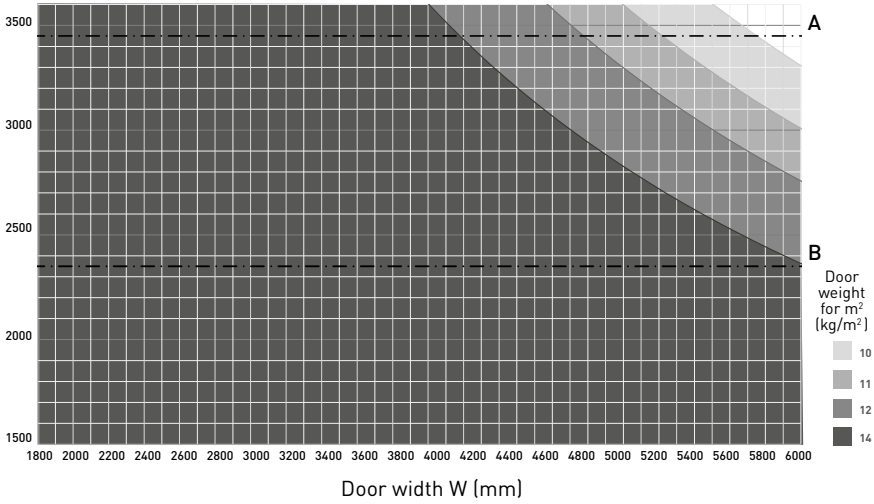

Maximum door dimensions - GO600 (max door weight = 130 kg)

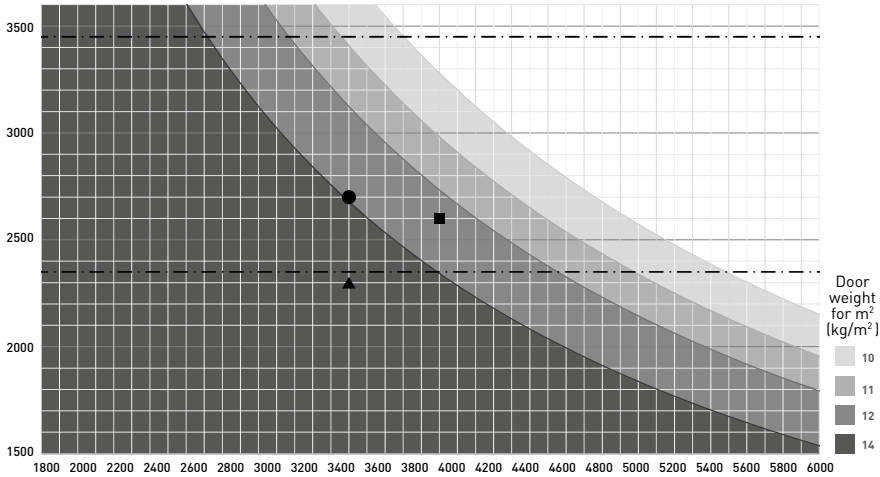

▲ **Example 1: sectional door 3.5 m wide and 2.3 m high, weight 12 kg/m²**
It is possible to use GO600 with TS100X3 rail because it is within the area formed by the 12 kg/m² curve

● **Example 2: sectional door 3.5 m wide and 2.7 m high, weight 12 kg/m²**
It is possible to use GO600 with TS100X4 rail because it falls within the area formed by the 12 kg²/m curve

■ **Example 3: sectional door 4 m wide and 2.6 m high, weight 14 kg/m²**
It is NOT possible to use GO600 with TS100X4 rail because it is NOT within the area formed by the 14 kg/m² curve.
It is recommended to use GO1000.

IP2450EN

6. Dimensions

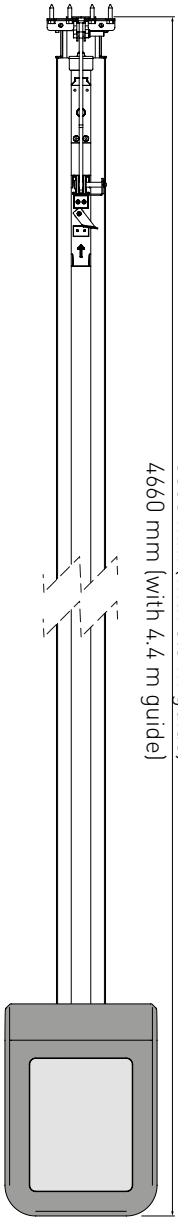

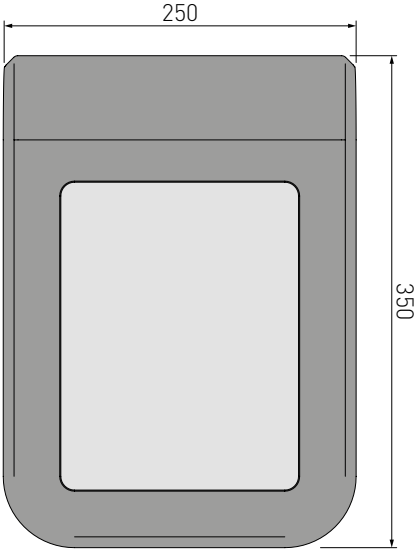

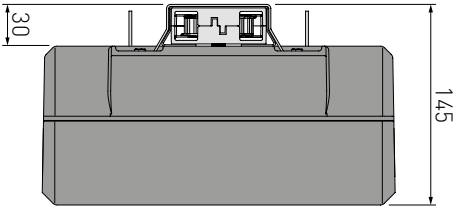

7. Example of installation

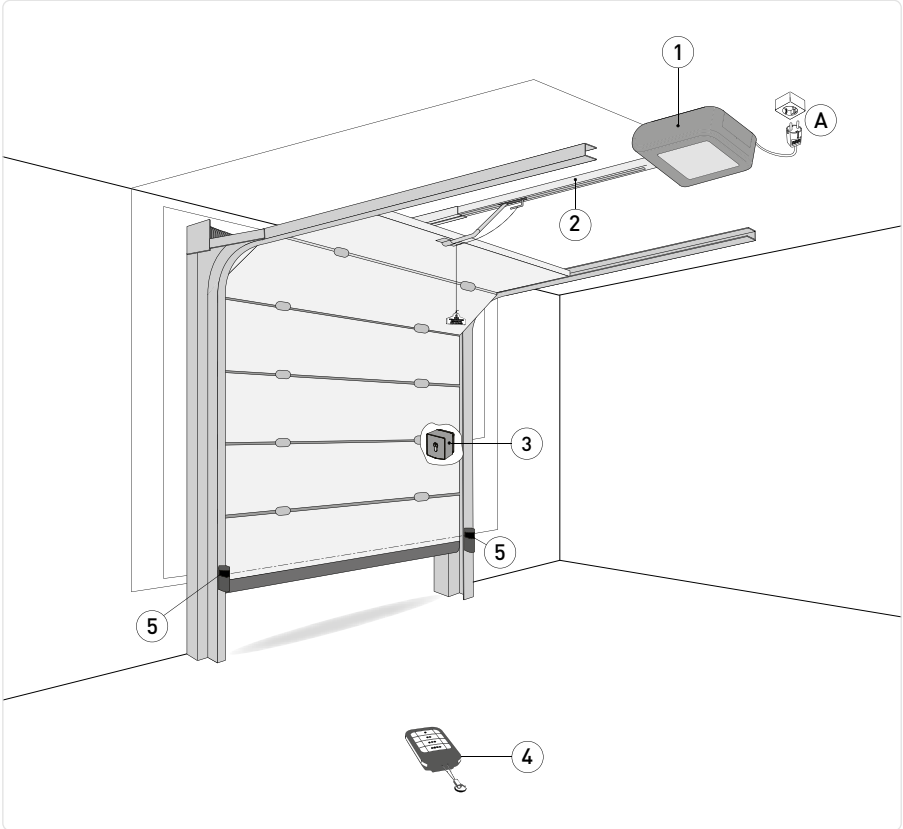

Ref.	Code	Description	Cable
1	GO600 GO1000	Automation + control panel	3G x 1.5 mm²
A		Connect the power supply to a suitable earthed socket, about 10-50cm from the pulling unit fixing position.	
2	TS100X3 TS150X2 TS200X2	Belt drive system with 3,3 m steel guide Belt drive system with 3,3 m steel guide Belt drive system with 4,4 m steel guide	
3		Digital combination wireless keypad	/
		Wall-mounted key-operated selector switch with European cylinder Semi-recessed key-operated selector switch with European cylinder Wall-mounted key-operated selector switch without cylinder Semi-recessed key-operated selector switch without cylinder	4 x 0.5 mm²
		RFID reader unit	5 x 0.5 mm²
4	GO-TX2 GO-TX4	Transmitter	/
5	S-PC	2-wire photocells with auto-test	2 x 0.5 mm²

8. Main components

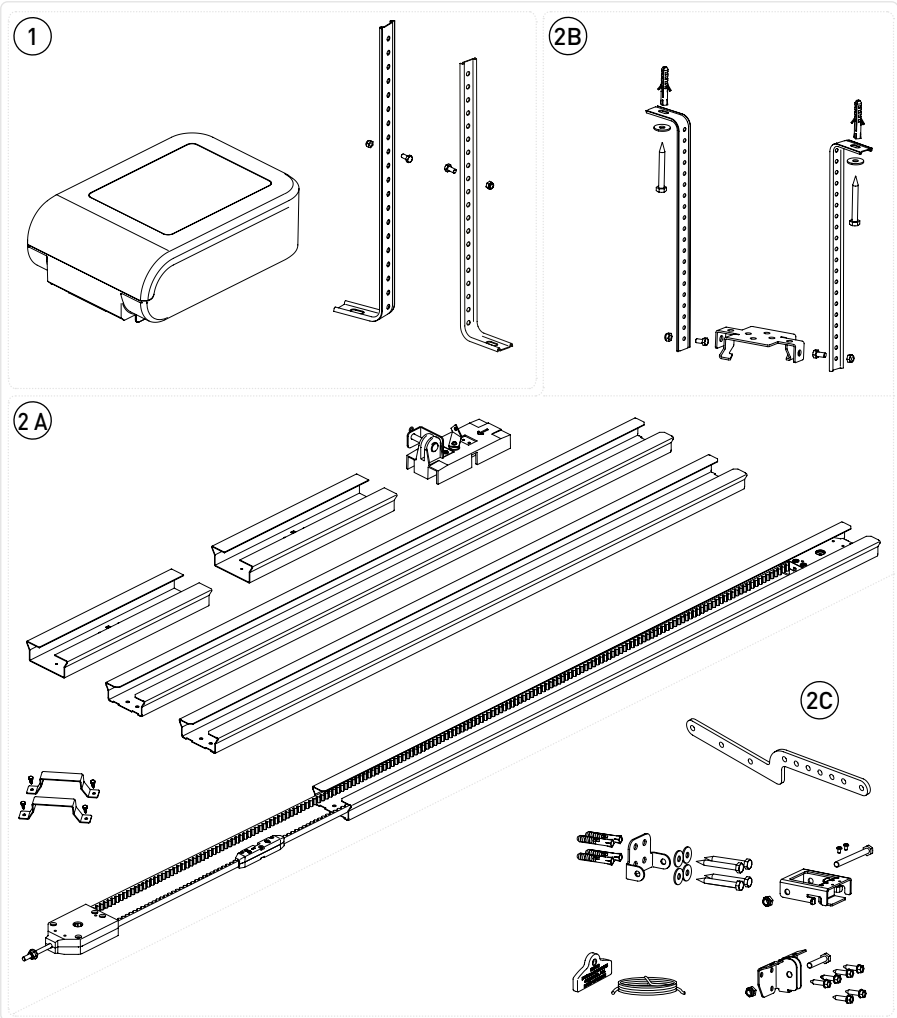

Ref.	Description
1	Automation
2A	Drive system
2B	Ceiling fixing system
2C	Guide and arm fixing brackets

Packaging can differ depending on the track set

9. Installation

9.1 Assembly guide

Assemble the drive unit as shown in the figures.

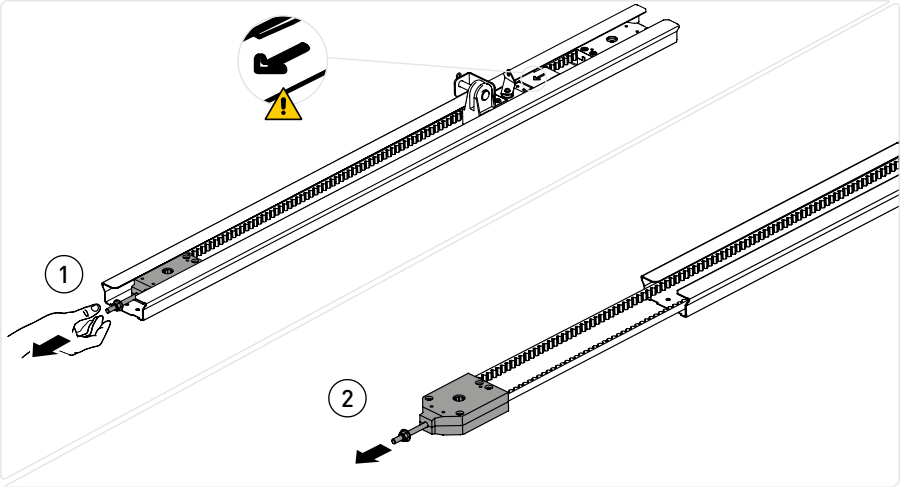

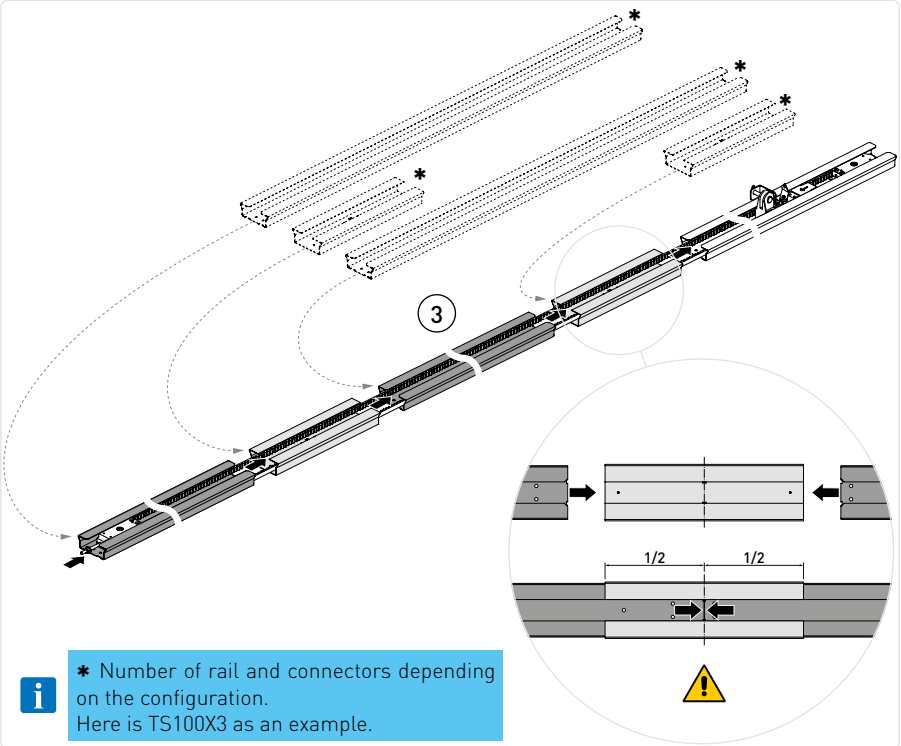

* Number of rail and connectors depending on the configuration.
Here is TS100X3 as an example.

IP2450EN

9.2 Tensioning the belt

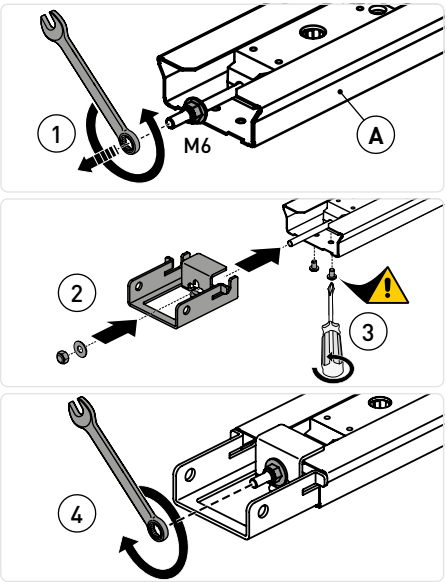

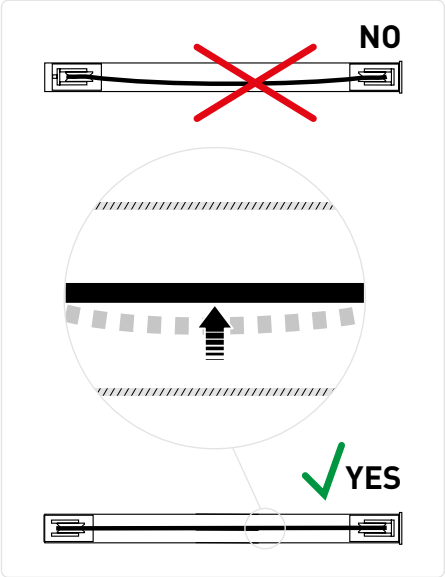

Tighten the locking nut until the belt is correctly tensioned [X] within the guide.

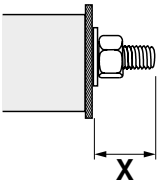

A	X
TS150X2	12-15 mm
TS100X3	12-15 mm
TS100X4	15-18 mm
TS200X2	15-18 mm

9.3 Assembling the automation

Maximum recommended tightening torque: 1.5 Nm

Ref.	Description
	SELF-TAPPING SCREW CYLINDRICAL HEAD CROSS RECESS 4,2x13 UNI 6954 TYPE C
	HEXAGON HEAD CAP SCREW M4x14 UNI 5739

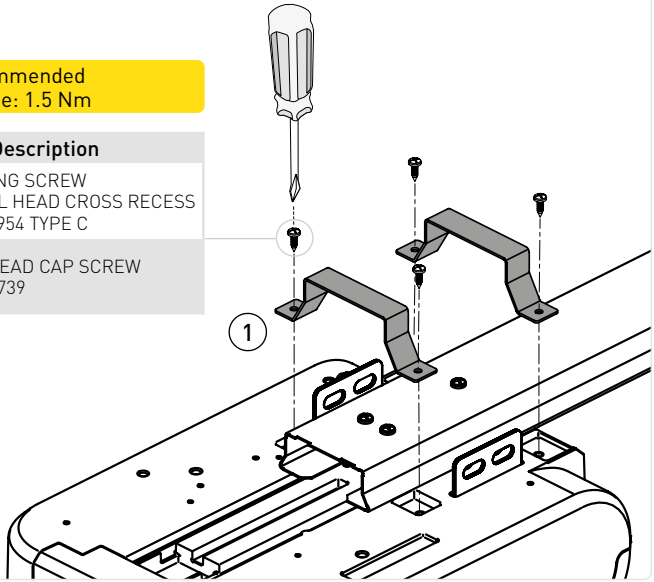

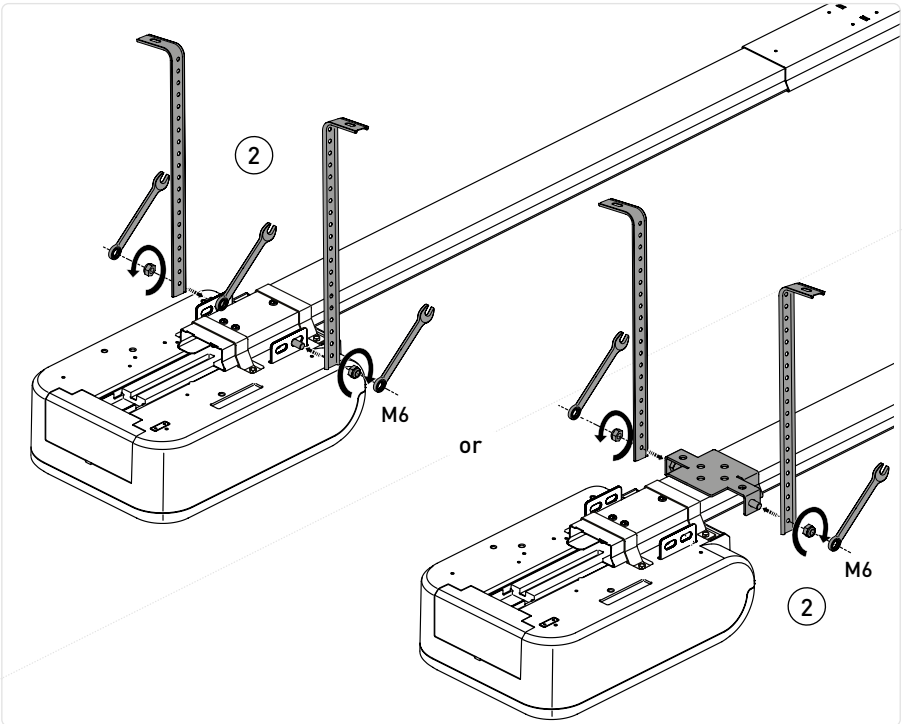

IP2450EN

9.4 Rail mechanical installation

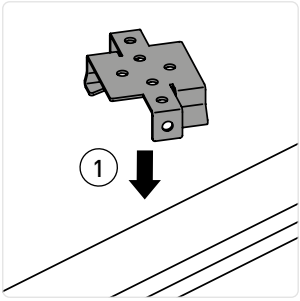

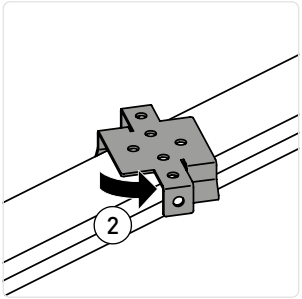

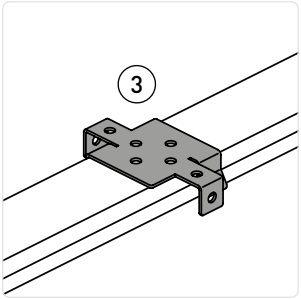

TS100X3

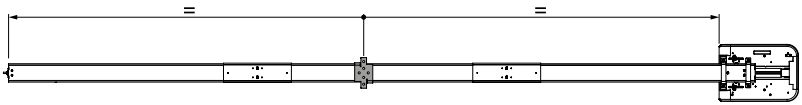

TS100X4

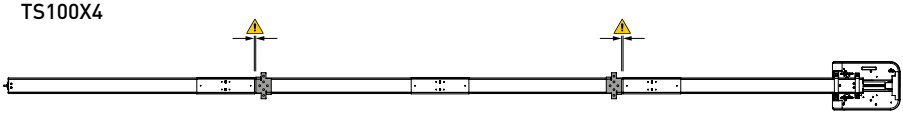

TS150X2

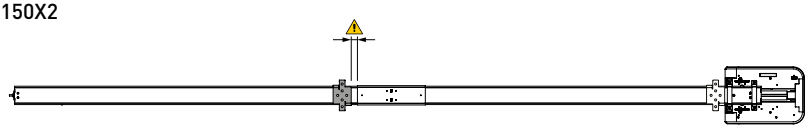

TS200X2

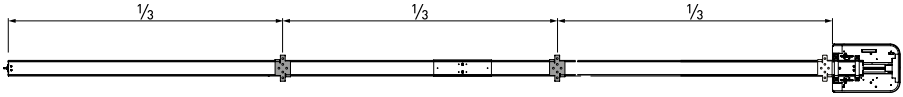

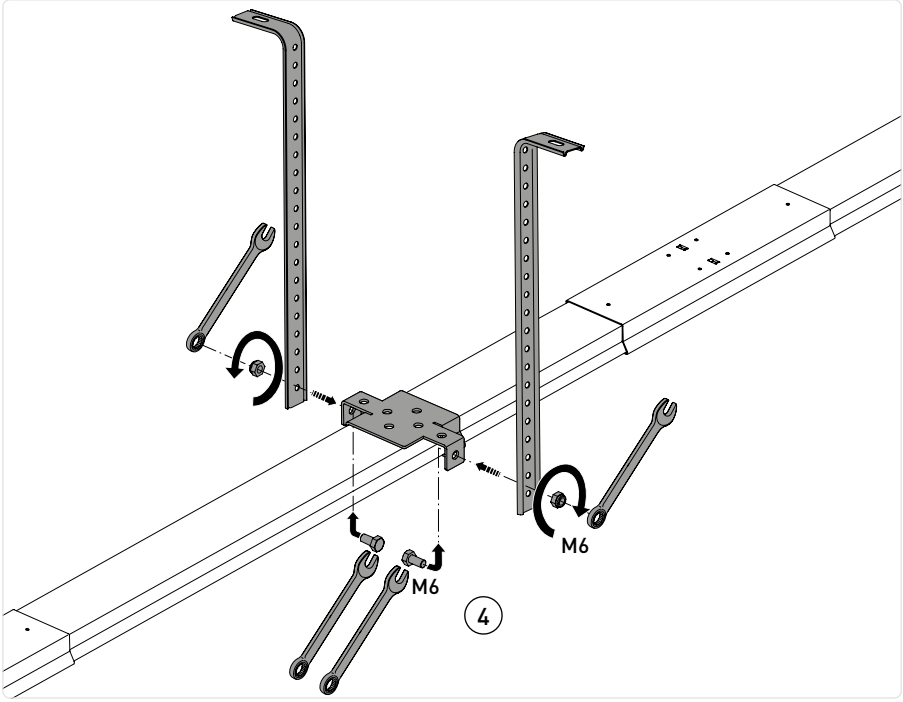

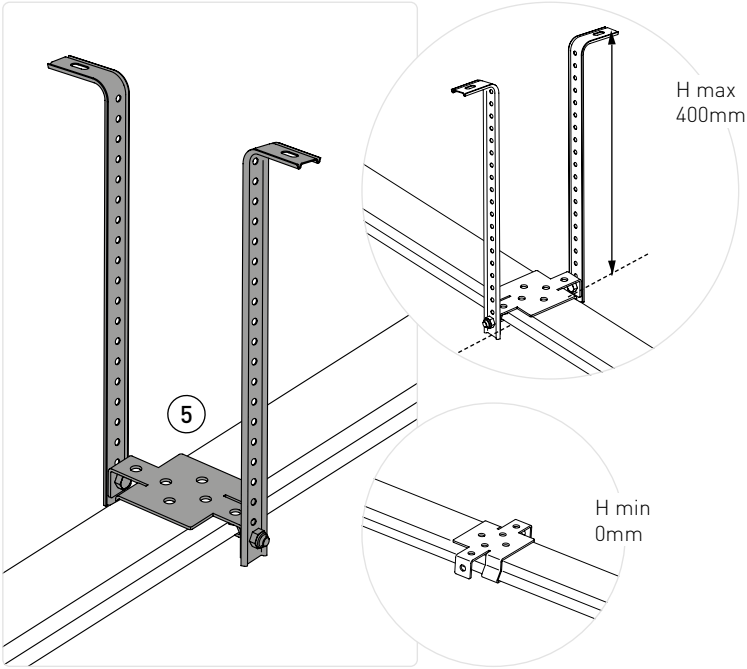

IP2450EN

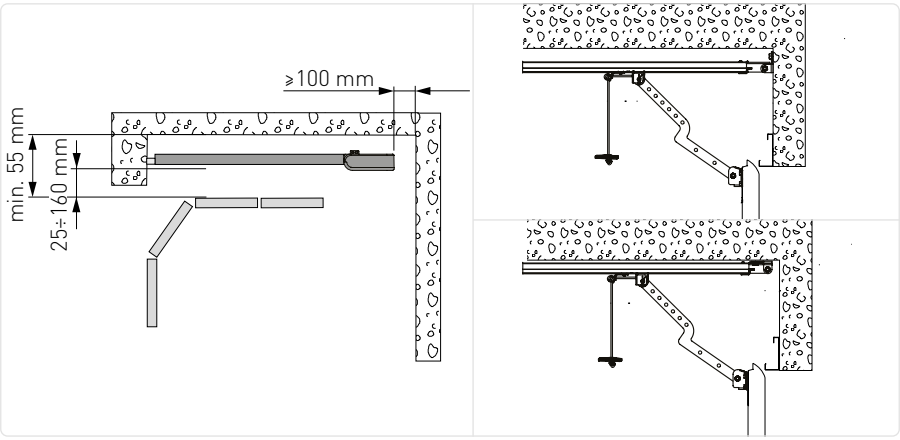
≥100 mm
min. 55 mm
25÷160 mm

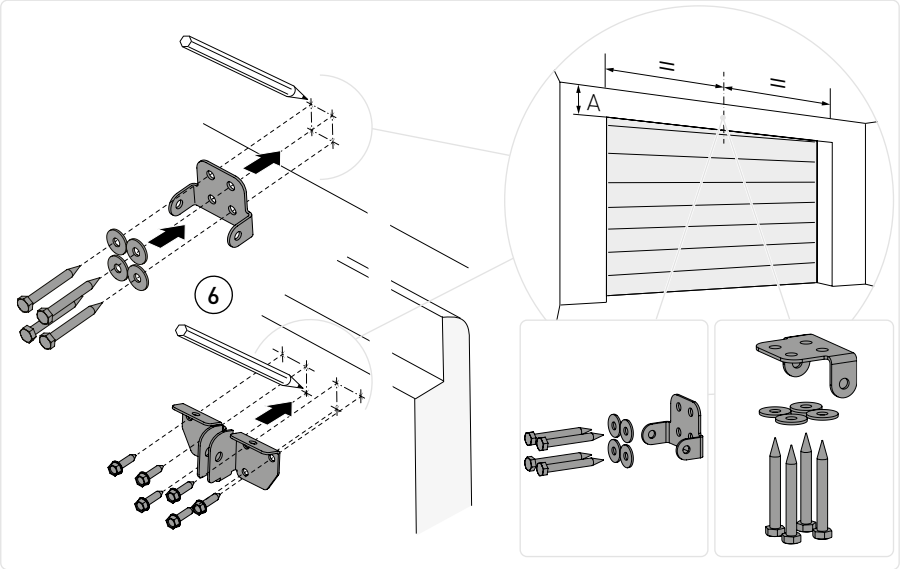
6
A

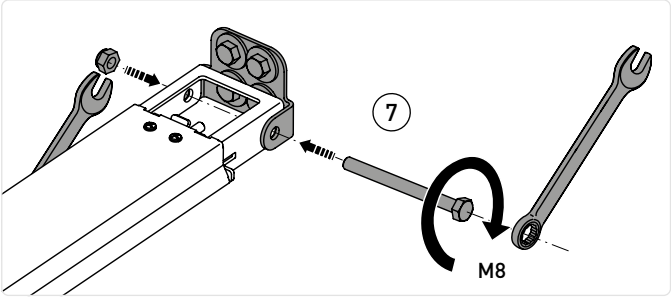
7
M8

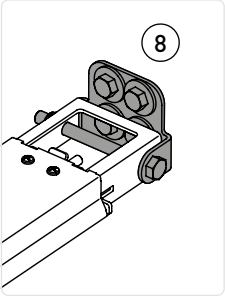
8

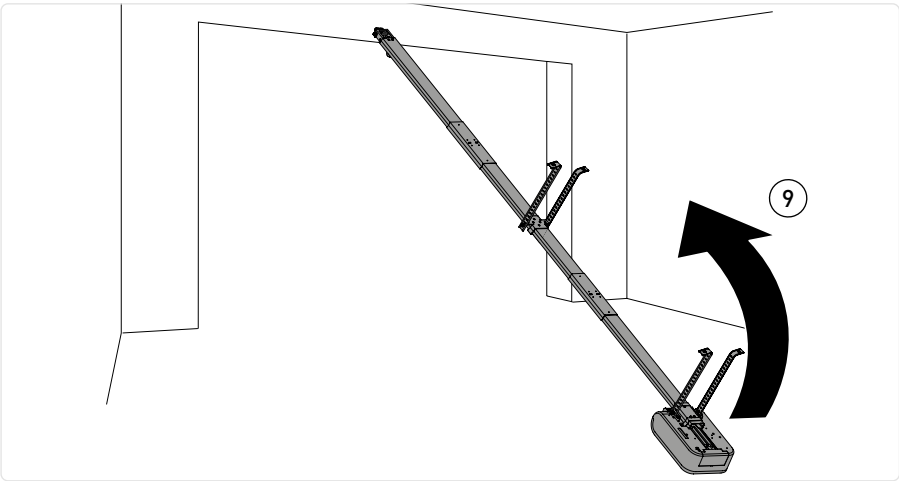

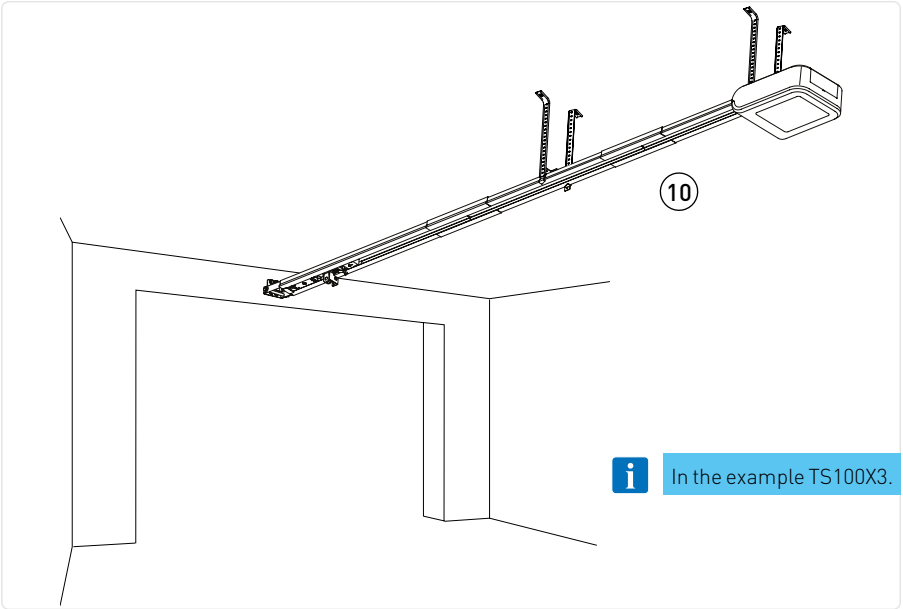

- Check the stability of the door, and make sure it moves smoothly.
- It must be possible to open and close the door easily and smoothly by hand.
- The automation must only be installed in dry places.
- With the pulling unit on the ground, fix the guide to the wall.
- Raise the pulling unit and bend the brackets as necessary (any excess parts can be removed), then attach to the ceiling.

9.5 Assembling and fastening the arm

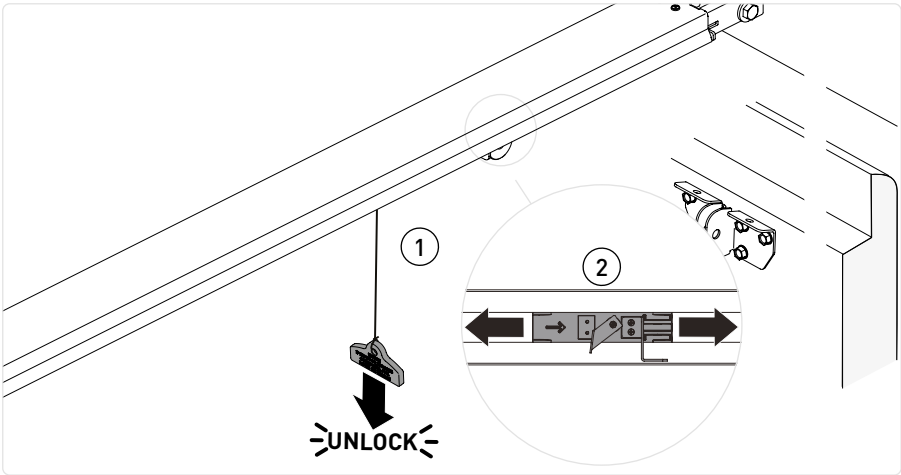

- Unlock the automation by pulling the cord downwards until the lock release lever is triggered.

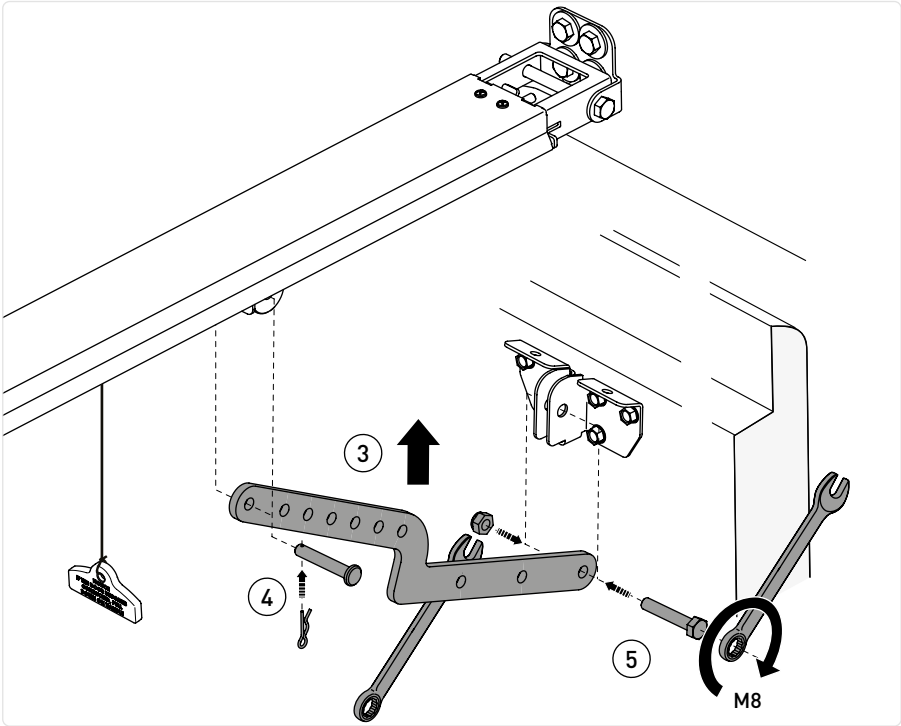

- Bring the carriage near the closed door, and fix the arm as shown above.

9.6 Cables passage

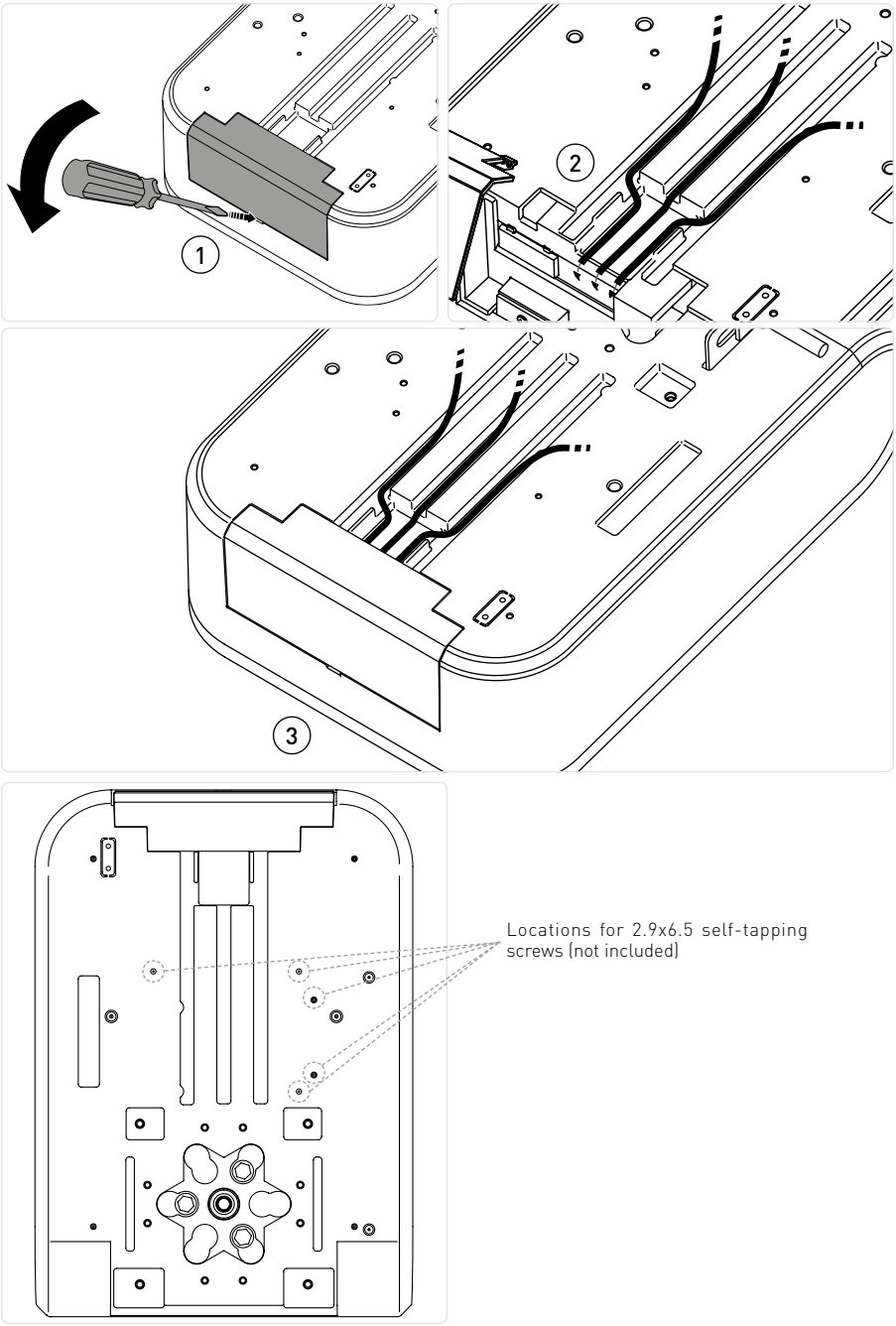

9.7 Warning labels and pictograms

9.7.1 Manual release

In the event of a power supply failure or fault, to manually move the door you must disconnect the power supply and stop the door: pull the cord downwards until the release lever is triggered and, keeping it pulled, open the door manually.

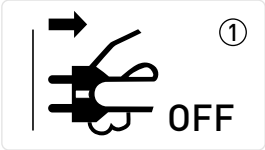

ASB1 - CORD RELEASE WITH KEY

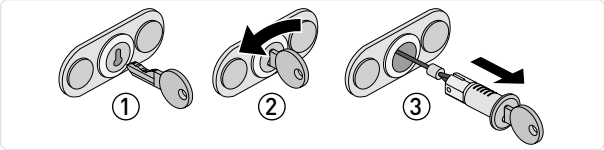

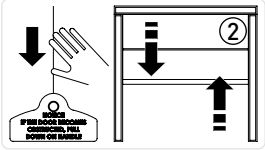

The door wing block and release operations must be performed with the motor idle.

9.7.2 Application of warning labels

- permanently fix the labels warning against entrapment/crusching [1][2] in a prominent place or near any fixed controls.
- permanently fix the label concerning the manual release [3] adjacent to its actuating member.

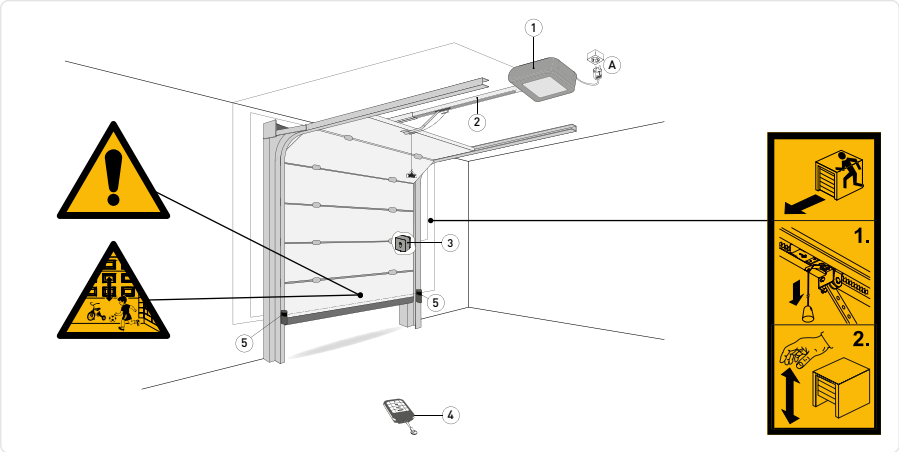

10. Electrical connections

Before making the electrical connection, check that the data on the nameplate match those on the power supply network. Ensure the presence of a suitable residual current and over-voltage protection device upstream of the electrical system. Make sure there are no sharp edges that could damage the power cord.

10.1 LCU60E electronic board

The figure shows the LCU60E electronic board and its connectors for connection to the power supply, motor and accessories.

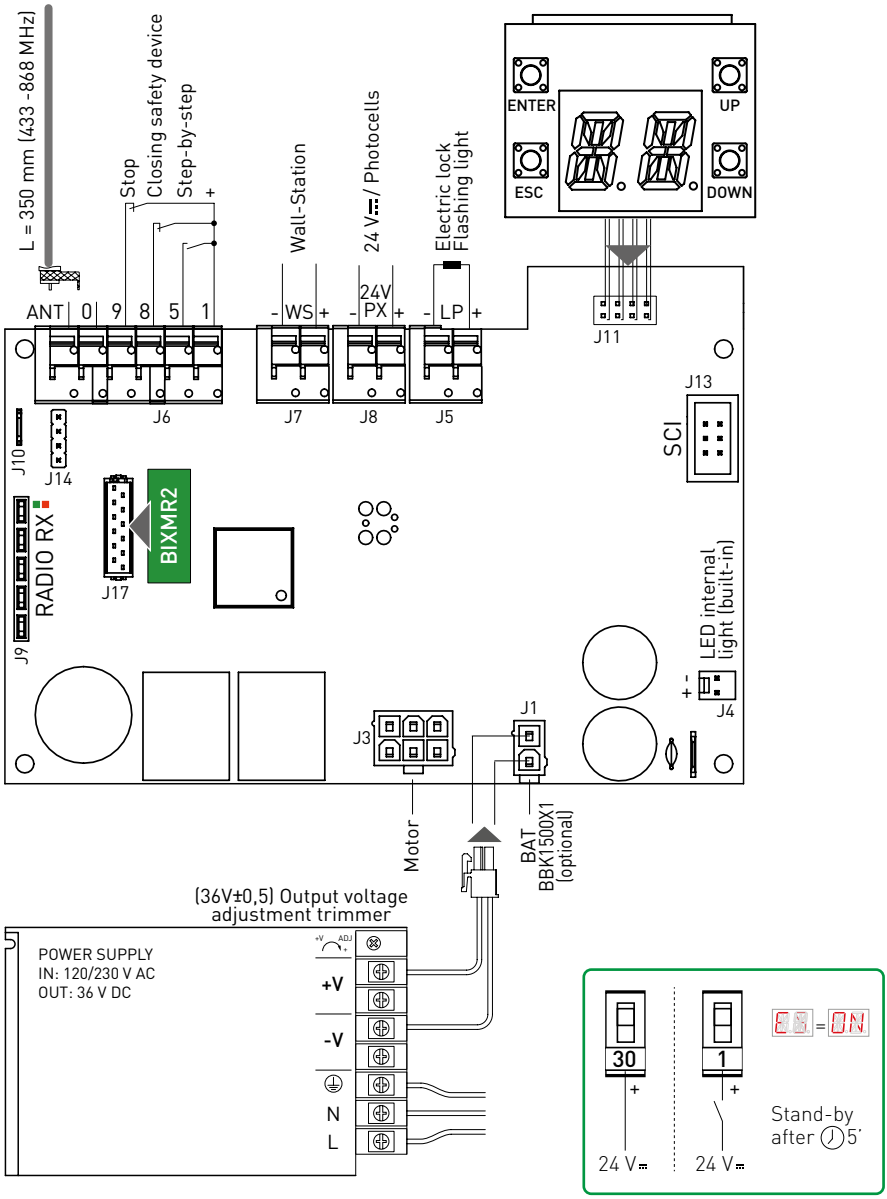

IP2450EN

10.2 Reports

LED Red	LED Green	Description
off	off	Card off or not working.
1 Blink every second	off	LCU card on and working. RCB (radio/BLE/WiFi) card absent or not working
off	1 Blink every second	LCU card on and working. RCB50 (radio) board present and functioning
off	2 Blinks every second	LCU card on and working. RCB100 (radio/BLE) card present and functioning
off	3 Blinks every second	LCU card on and functioning. RCB201 (WiFi) card on SCI present and functioning
off	4 Blinks every second	LCU card on and functioning. RCB50 (radio) + RCB201 (WiFi) card present and functioning
off	5 Blinks every second	LCU card on and functioning. RCB100 (radio/BLE) + RCB201 (WiFi) card present and functioning

11. Commands

Function		Command	Description
NO	STEP-BY-STEP	1 — 5	When selecting IO → TS → I-S, the closure of the contact NO activates a sequential opening or closing operation: opening-stop-closing-opening. The "opening-stop-closing-opening" sequence can be changed to "opening-stop-closing-stop-opening" by selecting OM → PP.
	OPENING		With IO → TS → I-3 selection, closing the contact activates the opening maneuver
NC	CLOSING SAFETY DEVICE	1 — 8	The opening of the NC contact triggers a reversal of the movement (reopening) during the closing operation, and the flashing of the courtesy light. After the 3rd consecutive reversal movement, the automatic closure is disabled (if active). The reversal contact is used by the contacts of the 4 wire photocells and safety devices to signal the detection of an obstacle to the LCU60E board.
NC	STOP	1 — 9	The opening of the safety contact causes the current operation to stop. If IO → R9 → 9P, automatic closure is disabled when terminals 1-9 recloses. If IO → R9 → 9T, automatic closure remains enabled when terminals 1-9 recloses. **NOTE:** the flashing light makes a blink

12. Outputs and accessories

Function	Output	Value of accessories	Description
Accessories power supply	- 24 PX +	24 V DC / 0.3 A max 2 s 24 V DC / 0.15 A continuous	Total accessories power output
Integrated led light	+ - J4	1750 lm	The internal LED light is connected to the board via connector J4. On AIR1000B it is possible to change the built-in LED light to the 3500 lms LED light (optional, see section 20.2) **WARNING:** An external third-party light cannot be connected on terminal J4.
Configurable output	J5	12 V - 24 V⎓ 3 A max for 3 s 1 A continuous	Output LP factory configured as flashing light ON-OFF LP → B3. It is possible to select preflashing settings from the OM → WO and/or OM → WC menu. To change the operation mode of the LP output refer to the IO → LP selection.
Radio antenna	J6 GND SIG		433 MHz - 868 MHz (350 mm) Use a RG-58 type coaxial cable (50 Ω) to connect an external antenna (ref. GOL148REA).
Module radio receiver	RADIO RX		RCB100E radio receiver module (standard) configurable from control panel: - 433.92 MHz (RO → FO → 43) - default - 868.35 MHz (RO → FO → 86) RCB50E compatible radio receiver module (optional) **WARNING:** The insertion and extraction of the receiver module must be done by paying attention to the direction of positioning and in the absence of power.
Module memory remote controls	COM	BIXMR2	Allows operation configurations to be saved using the DF → SK function. Saved configurations can be recalled using the DF → RC function. The memory module enables the storage of radio controls. In case of electronic panel replacement, the memory module in use can be inserted into the new control panel. **WARNING:** The insertion and extraction of the receiver module must be done by paying attention to the direction of positioning and in the absence of power.
DC power supply	J1	DC power supply	Power supply: 36 V DC. Without line voltage present, in battery operation mode: 24 V DC. With line voltage present the batteries are kept charged. With no line voltage present, the switchboard is powered by the batteries until the line is restored or until the battery voltage drops below the safety threshold. In the last case, the electronic control panel shuts down. **NOTE:** The operating temperature of rechargeable batteries is between +0°C and 40°C. To check the voltage level of the batteries refer to menu DF → BL.
Connector	SCI		Future use (IOT module)

IP2450EN

12.1 Wiring the accessories

12.1.1 4-wire photocells

The photocells can be connected to the LCU60E board as described in the figure below
To activate the photocells set I0 → J8 → PH.

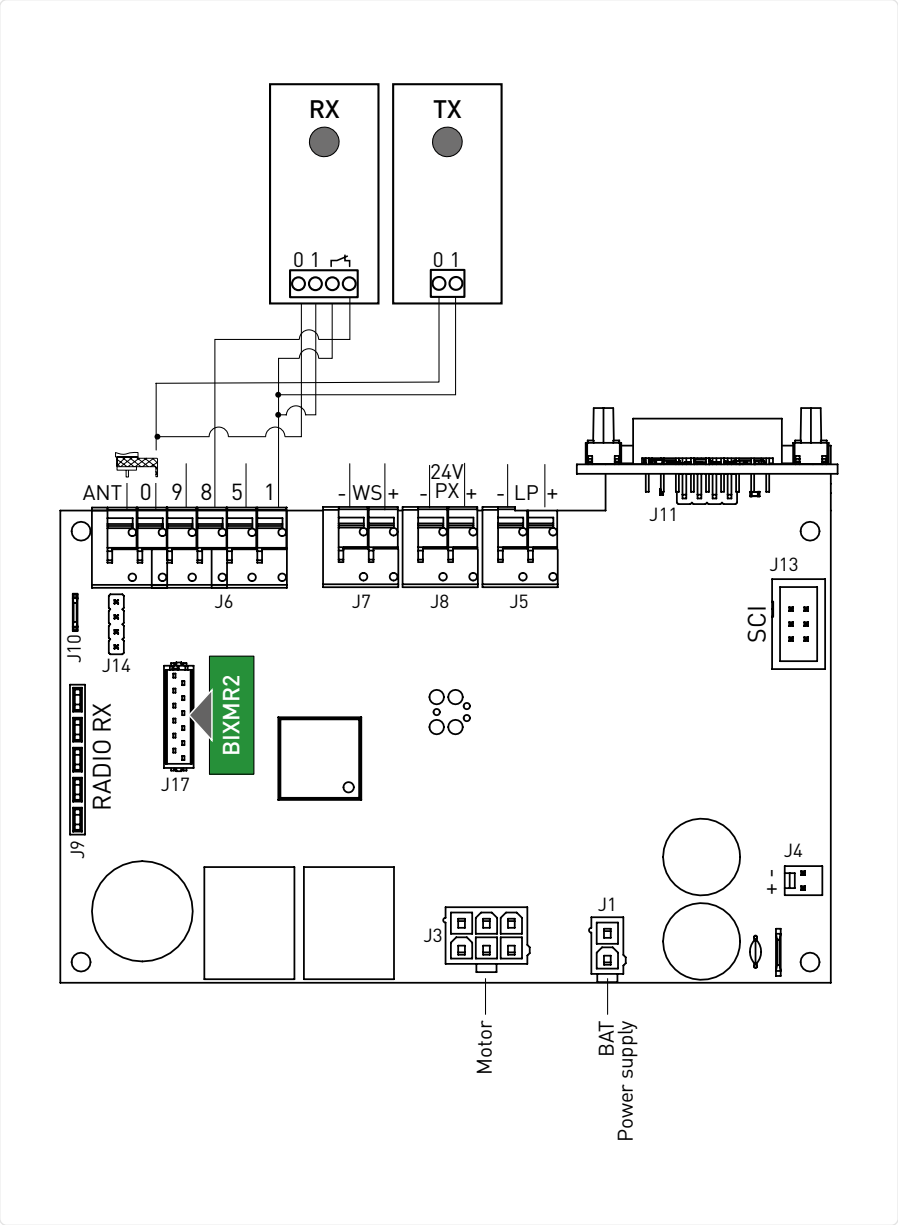

12.1.2 Two-wire photocells with Autotest

Photocells (ref. S-PC) can be connected to the LCU60E board as described in the following figure.
To activate the photocells, set I0 → D8 → P2.

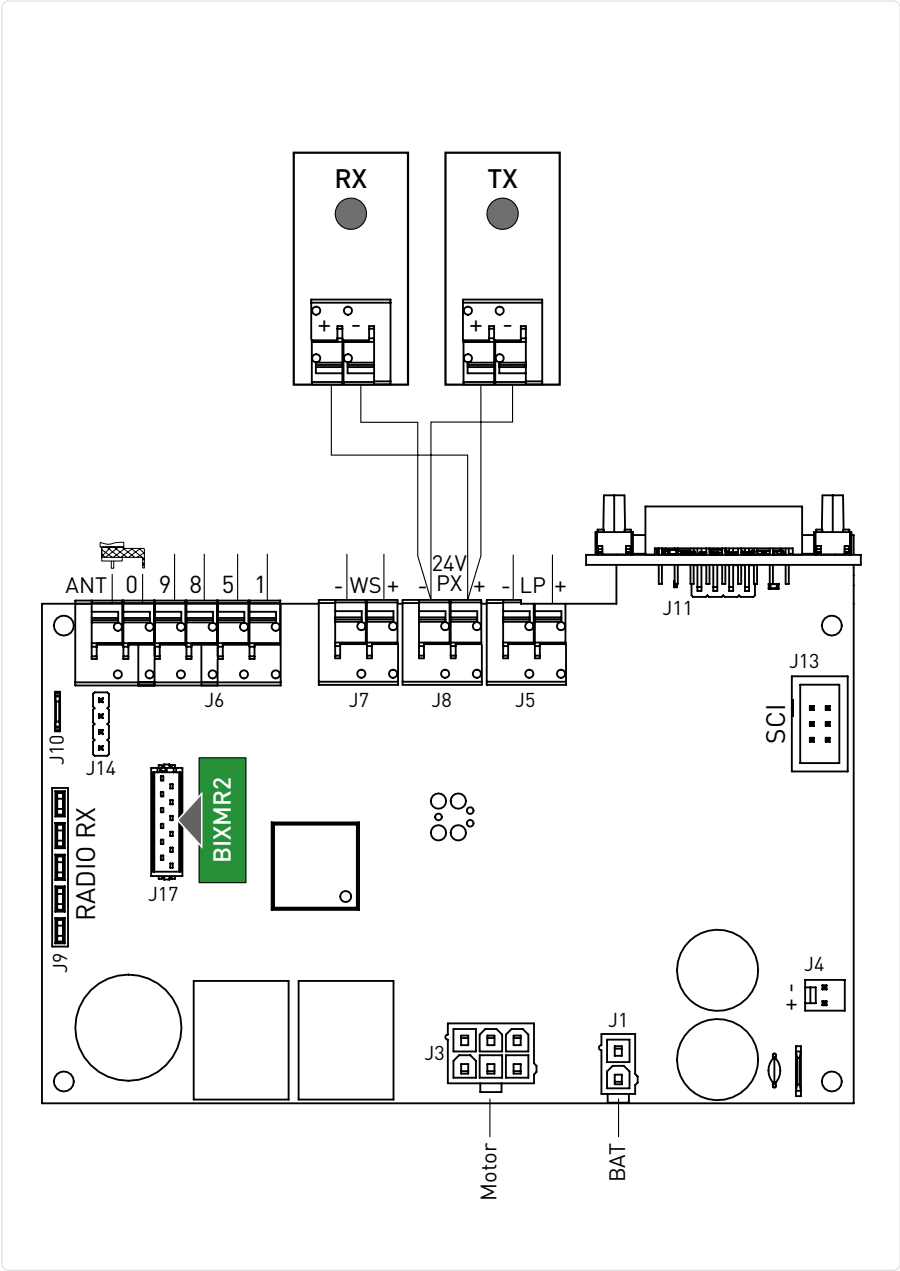

IP2450EN

12.1.3 Wall Station

The Wall Station accessory can be connected to the LCU60E board using the -WS+ terminal. To activate the Wall Station set IO → WS → ON.

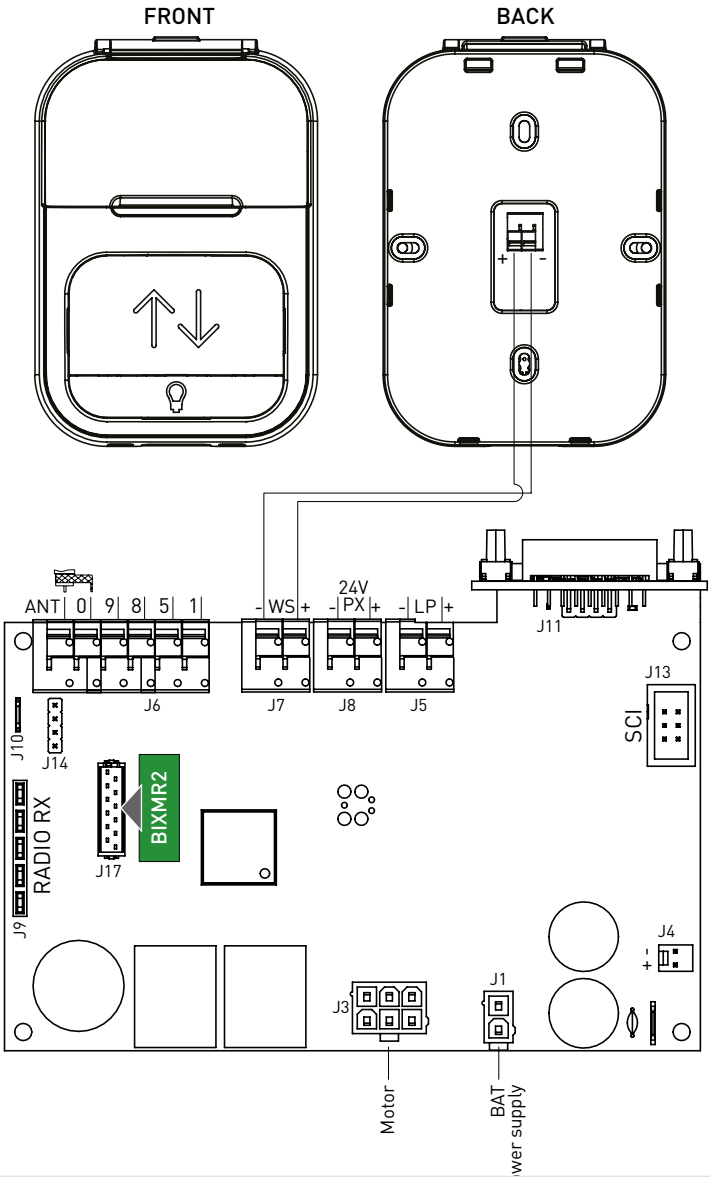

12.1.4 Battery (ref. BBK1500X1)

The figure shows the power connections of the LCU60E board. Power supply and 20-cell Ni-MH 1500 mAh battery pack are connected to the LCU60E via the CHARGER board.
When the battery pack is not present, the power supply is directly connected to the LCU60E board.

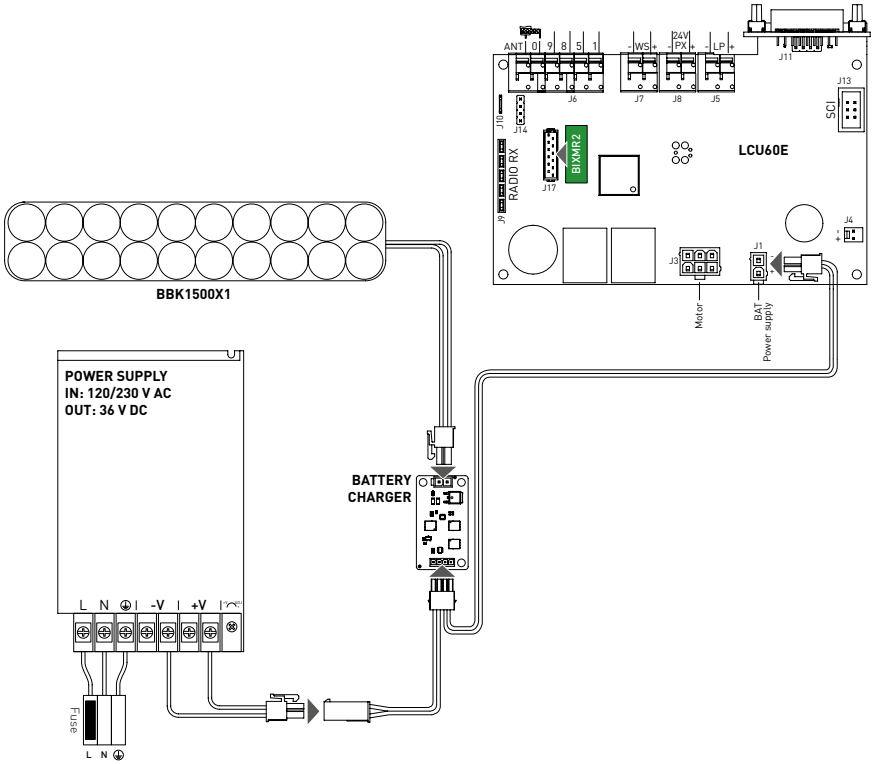

IP2450EN

13. Navigation buttons

Display controls	
Command	**Description**
UP	Navigation button UP
DOWN	Navigation button DOWN
ENTER	Menu button / confirm
ESC	Menu button / exit

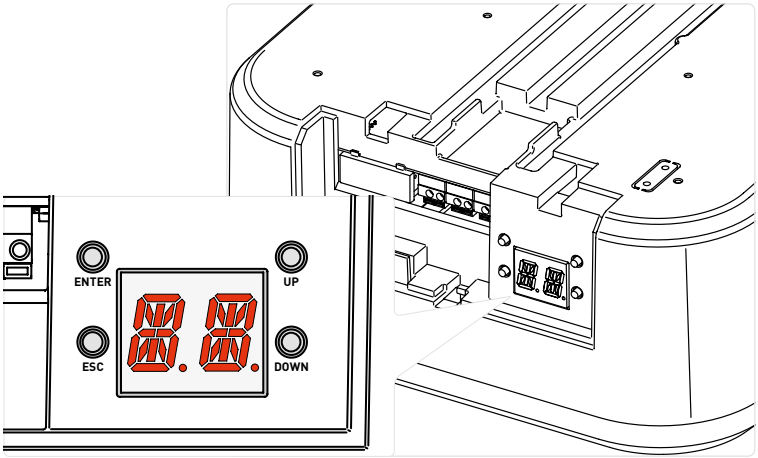

Status messages:

STEP	Display	Description
A		Door fully OPEN
B		Door between the two end stop positions
C		Door fully CLOSED

ENTER + UP	OPENING COMMAND

While the door is OPENING,
the display visualizes in sequence:

C → B → A

ENTER + DOWN	CLOSING COMMAND

While the door is CLOSING,
the display visualizes in sequence:

A → B → C

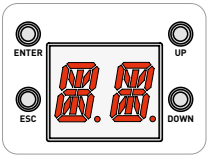

The adjustments and the procedures can only be carried out when the display is in mode:

A	
B	
C	

14. Self-learning of the stroke

WARNING 1: when a stroke self-learning operation is carried out, be sure that there is no obstacle on the run (e.g., execute a manual open/close operation of the garage door).

WARNING 2: In case of alarm or intervention of a protection (in case of photocells installed and configured via parameter d8) lthe learning procedure will be interrupted and the alarm code will be shown on the display (in case of intervention of a photocell A8 will be shown). Restart the learning procedure by pressing ESC, the system will return to L4.

NOTE 1: If the procedure is in progress (step L3 or over) and you want interrupt it, press ESC. The motor will stop and the learning restarts from the step L4.

NOTE 2: in case you want have access to menu to change some parameters value you must exit from learning procedure pressing ESC key for few seconds till the display visualizes --.
Once the setting is complete, it is possible to return to the self-learning procedure by pressing ESC repeatedly until you exit the menu and return to L4. If it is not possible to return to L4, press the ENTER + ESC pbuttons simultaneously for about 4 seconds to perform a reset of the learning procedure

IP2450EN

Self-learning procedure

1. **Turn on the power supply and set the open position.**

- The display flashes L4.
- The courtesy light flashes 4 times during operation L4.
- Press and hold the UP button. The door will open.
- Release the button when the required opening position is reached.
- Use the UP and DOWN buttons to correct the position if necessary.

2. **Press the ENTER button. Self-learning operation start**

- The automation stores the opening position and begins a closing operation.
- The display flashes L3.
- Integrated LED light flashes 3 times.
- When the door reaches the closed position, the display flashes L2. The courtesy light flashes twice.
- The automation opens automatically as far as the open position. The display flashes L1. The courtesy light flashes once.
- The automation automatically recloses as far as the closed position, the display visualizes L2 and the door reopens.
- The lamp does not flash.

> If the garage door stops before reaching the closed position, this could be due to an obstacle detected during the learning stroke. Stop the procedure by pressing the ESC key to avoid incorrect acquisition. Check for any physical obstacles (also check he sliding friction) and repeat the procedure. If necessary, change the thrust values via parameter A2

3. **The self-learning procedure is complete when the door is fully open, and the courtesy light is ON.**

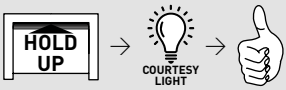

15. Memorizing / Deleting remote controls

15.1 Memorizing remote controls

Quick memorization:

Memorization from menu:

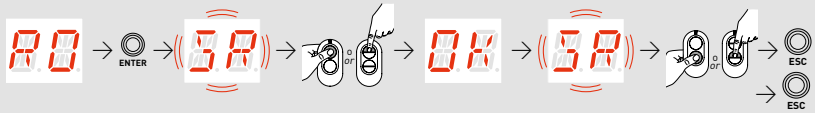

- Quick storage: press the ESC and DOWN buttons simultaneously for about 2 seconds (SA), flashing appears on the display and you can associate the desired buttons.
- Storage from menu: press UP or DOWN to scroll through menus. Select AD, press ENTER, (SA) starts flashing and you can associate the desired buttons.
- Once (SA) is displayed, OK starts flashing again and the next button can be associated.
- Press ESC to exit.
- Once you finish to associate buttons if you want set a specific function to the buttons you have to go in the menu (SA) and acting on the parameters C1, C2, C3, C4 otherwise default functions will be associated.

NOTE: if only one button/channel is memorized then the associate function will be automatic set to **OPEN** or **STEP-by-STEP** depending by the value of AD → AM parameter.

15.2 Deleting remote controls

The remote control can be deleted acting on the specific parameter in the menu and follow the instructions:

Deletion of a single remote control

See the parameter:

see paragraph 17.4

Deletion of all remote controls

See the parameter:

see paragraph 17.4

IP2450EN

16. Using of the menus

16.1 Switching the display ON and OFF

The procedure to switch ON the display is as follows:

MAIN LEVEL

- The display indicates by default the status of the door
- Press the ENTER key
- The display functioning check starts
- The main level menu is displayed

The procedure to switch OFF the display is as follows:

MAIN LEVEL

After 60 seconds of inactivity, you exit the configuration menu and the display indicates the status of the door

16.2 Navigation keys

VALUE LEVEL **PARAMETER MAIN LEVEL** **PRINCIPALE**

PARAMETER LEVEL

- Press UP or DOWN to scroll through the menus.
- Press ENTER to go in **PARAMETER LEVEL**.
- Press ESC to exit from a sub-menu.

PARAMETER LEVEL

- Press UP or DOWN to scroll through the parameters inside the specific sub-menu.
- To set a parameter, select the desired **VALUE** and press ENTER for 2 seconds to save.

16.3 Shortcuts

16.3.1 Calibration reset

By pressing the ENTER and ESC buttons simultaneously, causes the display to flash RC, first slowly and then faster. Continue to hold (for about more than 4 seconds) until the system performs a reset and the display shows CY (all calibration run values have been cleared). Now you can release the keys, the system is ready to perform a new learning procedure

NOTE: the stored calibration can also be deleted by acting on the appropriate parameter in the RA → RA menu

16.3.2 System restart

Pressing the UP and DOWN keys simultaneously will cause the display to flash RS, first slowly and then faster. Continue to hold (for about more than 4 seconds) until the system performs a restart.

NOTE: it is only a system restart, calibration values, parameter setting and transmitters are not deleted.

16.3.3 Radio remote control storage via control panel

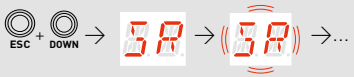

If you press the ESC and DOWN buttons simultaneously for more than 4 seconds, the display shows SA, then release the buttons. When the display starts flashing SA, you can associate the desired buttons.

NOTE: storage of remote controls can also be performed by acting on the appropriate parameter in the menu

16.3.4 Wi-fi reset

If you press ESC and UP keys simultaneously, the display will flash RW first slowly, then faster. When th display stops flashing and RW is fixed, the WiFi device will be reset, release the keys.

17. Parameters LCU60E

17.1 Main level menu

	Display	Description
	FU	**Frequent use** The menu allows to manage the most commonly used parameters to customize the functionalities of the automation
Complete menu	OM	**Operation Mode** The menu allows to manage all the parameters used for operation modes of the automation (type of automation installed, predefined settings, automatic closure, etc.)
Complete menu	RA	**Run Adjustment** The menu allows to adjust all the run parameters (opening/closure speed, slowdown positions, obstacle thrust sensibility etc.)
Complete menu	IO	**Input/Output Configuration** The menu allows to configure the inputs/outputs functionalities of the automation (selection of devices connected to the terminals, photocells, flashing light/electro-lock setting, etc.)
Complete menu	RO	**Radio and Connectivity Operations** The menu is used to manage all parameters for the radio/wireless functions of the control panel
Complete menu	DF	**Diagnostic Functions** The menu allows to manage all other parameters used for additional services (diagnostic counters, FW updating, energy saving, etc.)

17.2 Frequent use menu map

MAIN LEVEL	
FU	FU - Frequent Use
	PARAMETER LEVEL
AS	AS - Selection of door type
DM	DM - Open direction
EP	EP - Setting encrypted radio transmission protocol (AES 128bit and PROTECTED mode)
SR	SR - Remote control storage
RM	RM - Radio receiver operation
T5	T5 - Terminal 5 operation mode
AC	AC - Automatic closure enabling
TC	TC - Setting of automatic closing time [s]
RP	RP - Adjustment of partial opening measurement [%]
TP	TP - Setting of automatic closing time after partial opening [s]
R1	R1 - Adjustment of thrust on obstacles in the opening
R2	R2 - Adjusting thrust on closing obstacles
VA	VA - Opening speed [cm/s]
VC	VC - Closing speed [cm/s]
R9	R9 - Configuration of input 1-9
D8	D8 - Selection of device connected to terminals 1-8
WF	WF - Setting of Wi Fi functionality

17.3 Complete menu map

MAIN LEVEL

OM - Operation Mode

PARAMETER LEVEL	
AS	AS - Selection of door type
DM	DM - Open direction
AC	AC - Automatic closure enabling
TC	TC - Setting of automatic closing time [s]
RP	RP - Adjustment of partial opening measurement [%]
TP	TP - Setting of automatic closing time after partial opening [s]
PP	PP - Setting of step-by-step sequence
TS	TS - Renewal of automatic closing time after release of safety device [%]
WO	WO - Setting of pre-flashing time on opening [s]
WC	WC - Setting of pre-flashing time on closing [s]
PK	PK - Parking assistance

RA - Run Adjustment

PARAMETER LEVEL	
VA	VA - Opening speed [cm/s]
VC	VC - Closing speed [cm/s]
R1	R1 - Adjustment of thrust on obstacles during opening
R2	R2 - Adjustment of thrust on obstacles during closing
OB	OB - Adjustment of deceleration distance during opening [cm]
CB	CB - Adjustment of deceleration distance during closing [cm]
PO	PC - Adjustment of approach speed during opening [cm/s]
PC	DC - Setting of disengagement on stop during closing [mm]
VR	VR - Setting acquisition speed
TA	TA - Adjusting time acceleration in opening
TQ	TQ - Adjusting time acceleration in closing
TD	TD - Adjusting deceleration time in opening
TU	TU - Adjusting deceleration time in closing
DC	DC - Setting of disengagement on stop during closure [mm]
ST	ST - Adjusting the inrush time
DT	DT - Adjusting obstacle recognition time
RR	RR - Resetting run calibration values

IO - Input/Output Configuration

PARAMETER LEVEL	
R9	R9 - Configuration of input 1-9
T5	T5 - Terminal 5 operation mode
D8	D8 - Selection of device connected to terminals 1-8
LP	LP - Function of output +LP-
LU	LU - Time to turn on the courtesy light [s]
LG	LG - Switch-on time for independently commanded courtesy light [min]
BR	BR - Brightness level of the courtesy light
LR	LR - Electric lock release time [s]
ES	ES - Energy-saving
WS	WS - Setting of Wall Station device
BZ	BZ - Buzzer enable/disable

RO - Radio and Connectivity Operations

	PARAMETER LEVEL
RO	EP - Setting encrypted messages
	SR - Remote control storage
	RM - Radio receiver operation
	TX - Visualization of counter showing remote controls stored
	MU - Setting of the maximum number of remote controls that can be stored in the memory
	ER - Deletion of a single remote control
	EA - Total memory deletion
RO	C1, C2, C3, C4 - Selection of CH1, CH2, CH3, CH4 function of stored remote control
	FQ - Radio frequency selection
	VL - enable/disable vacation mode
	BT – Enabling/disabling Bluetooth®
	WF - Setting of WiFi functionality
	WQ - Request to restart the connected WiFi device (in particular Apple HomeKit)
	MA - Deletion of Mobile App control permissions

DF - Diagnostic Functions

	PARAMETER LEVEL
	AI - Automation model ID Info
	CU - Visualization of the firmware version on the control panel
	AL - Alarm counter
	UP - Alarm log
DF	AR - Alarm reset
	CV - Display of total operations counter
	CP - Display of partial operations counter
	ZP - Reset of partial operations counter
	CA - Setting the maintenance alarm (factory setting - alarm deactivated: 0.0 00. 00)
	OA - Selecting maintenance alarm display mode
	CH - Display of power supply hour counter
	BH - Visualization of counter for power supply hours via battery
	SV - Saving user configuration on control panel storage module
	RC - Configuration loading
DF	RL - Loading of last configuration set
	EU - Erasing of user configurations and last configuration set in the storage module
	IM - Motor current visualization
	BL - Visualization of Battery voltage level
	EL - Efficiency level of the automation
	EN - Enable force detection test according EN 13241-1
	UB - Door unbalanced level
	RD - Resetting of factory settings

17.4 Frequent use parameters description

FU - Frequent Use
The menu allows to manage the most commonly used parameters to customize the functionalities of the automation.

Parameter	Description	Selections available
AS	**AS - Selection of automation door installed** • **SD**: sectional door • **LS**: side sectional door • **BS**: up-and-over door with soft start	SD LS BS
DM	**DM - Open direction** • **00**: opening direction with MAGIC guides and TSRFK retrofit kit • **01**: standard opening direction with GO guides **NOTE:** NOTE: If the value has been changed, the previously acquired stroke parameters will be deleted and the operator will wait for a new self-learning maneuver L4. See section 14	00 01
EP	**EP - Setting up encrypted radio transmission protocol (AES 128bit and PROTECTED mode)** If the possibility to receive coded messages is enabled, the control panel will be compatible with remote controls of the "CRIPTED or PROTECTED mode" type. • **ON**: enabled • **OF**: disabled	ON OF
SR	**SR - Remote control storage** ENTER → SR → OK → SR → ESC ... x2, x3... By pressing ENTER, SR starts flashing and it is possible to associate the desired buttons. After OK is displayed, SR flashes again on the display and it is possible to associate the next button. To exit, press or for 2 seconds and move on to the next item. **NOTE:** if the display shows NO flashing, the remote control may already be stored.	
RM	**RM - Radio receiver operation** This is the function associated to radio command when only one channel is stored (independently which one is) • **1-5** - Step-by-step • **1-3** - Opening	1-5 1-3
T5	**T5 - Terminal 5 operation mode** This parameter is associated to the functionality of the terminal 1-5 • **1-5** - Step-by-step • **1-3** - Opening	1-5 1-3
AC	**AC - Automatic closure enabling** • **OF** - Disabled • **ON** - Enabled	OF ON
TC	**TC - Setting of automatic closing time [s]** It is set with different intervals of sensitivity: • **from 0" to 59"** with intervals of 1 second • **from 1'0 to 1'5** with intervals of 10 seconds For each interval, the display visualizes: - 1'1 → 1 minute and 10 seconds - ... - 1'5 → 1 minute and 50 seconds • **from 2' to 4'** with intervals of 1 minute	00 ... 59 1'0 ... 1'5 2' ... 4' 4'
WF	**WF - Setting of WiFi functionality (YALE home ready)** It is used to enable or disable the WiFi functionality . • **ON** - WiFi is enabled • **OF** - WiFi is disabled	05 ... 99

	RP	**RP - Adjustment of partial opening measurement [%]** This parameter adjusts the percentage of partial opening in relation to the total opening of the automation. • **from 5% to 99 %** with intervals of 1 %	05 ... 99
	TP	**TP - Setting of automatic closing time after partial opening [s]** It is set with different intervals of sensitivity: • **from 0" to 59"** with intervals of 1 second • **from 1'0 to 1'5** with intervals of 10 seconds For each interval, the display visualizes: - 1'1 → 1 minute and 10 seconds - ... - 1'5 → 1 minute and 50 seconds • **from 2' to 4'** with intervals of 1 minute	00 ... 59 10 ... 15 21 ... 41 10
3	R1	**R1 - Adjustment of thrust on obstacles and motor current during opening [%]** When the thrust exceeds the threshold, the system detects an obstacle and the movement is stopped. **00 -** Minimum thrust (minimum current delta for obstacle detection) **99 -** Maximum thrust (maximum current delta for obstacle detection) The threshold is calculated dynamically like a delta on the motor current measured during the opening stroke.	00 ... 99 20
	R2	**R2 - Adjustment of thrust on obstacles and motor current during closing [%]** When the thrust exceeds the threshold, the system detects an obstacle, and the movement is inverted. It has divided in two ranges with a different sensibility to give maximum flexibility according to needs: **from 00 to 40** – Soft thrust **from 41 to 99** – Strong thrust The threshold is calculated dynamically like a delta on the motor current measured during the closing stroke. ⚠ **WARNING:** The default value ensures the closing thrust force values return within the limits established by Standard EN12453. Set different values to have stronger thrust force but in this case be aware that it is not guaranteed the fulfilment of limits by Standard EN12453. This operation must be carried out by qualified personnel.	00 ... 99 20
	VA	**VA - Opening speed [cm/s]** • **from 8 to 22 cm/s** with intervals of 1 cm/s	08 ... 22 (default value. Depends on AS setting)
3	VC	**VC - Closing speed [cm/s]** • **from 8 to 22 cm/s** with intervals of 1 cm/s ⚠ **WARNING:** the default value ensures the closing thrust force values return within the limits established by Standard EN12453. In case a higher closing speed is set it is not guaranteed the fulfillment of limits by Standard EN12453.	08 ... 22 18
	R9	**R9 - Configuration of input 1-9** • **NO**: disabled. • **9P**: open state of the input triggers permanent stop (default). • **9T**: open state of the input triggers temporary stop. Once contact closes, automatic closure time (if enabled) is activated.	NO 9P 9T
	D8	**8 - Selection of the device connected to terminals 1-8** • **NO** - None • **PH** - 4-wire photocells • **SP41** - Photocells with safety test • **SE** - Safety edge • **S41** - Safety edge with safety test • **P2** – 2-wire photocells with safety test S-PC • **PE** – Safety edge + 2-wire photocells with safety test S-PC • **PS** – Safety edge with safety test + 2-wire photocells with safety test S-PC	NO PH P4 SE S4 P2 PE PS

17.5 Complete menu - parameters description

OM - Operation Mode

The menu allows to manage all the parameters used for operation modes of the automation (type of automation installed, predefined settings, automatic closure, etc.)

Parameter	Description	Selections available
AS	**AS - Selection of automation door installed** • **SD**: sectional door • **LS**: side sectional door • **BS**: up-and-over door with soft start **NOTE:** NOTE: If the value has been changed, the previously acquired stroke parameters will be deleted and the operator will wait for a new self-learning maneuver L4. See section 14	SD LS BS
DM	**DM - Open direction** • **00**: opening direction with TOP track system and TSRFK retrofit kit • **01**: standard opening direction with AIR track system **NOTE:** NOTE: If the value has been changed, the previously acquired stroke parameters will be deleted and the operator will wait for a new self-learning maneuver L4. See section 14	00 01
AC	**AC - Automatic closure enabling** • **OF** - Disabled • **ON** - Enabled	OF ON
TC	**TC - Setting of automatic closing time [s]** It is set with different intervals of sensitivity: • **from 0" to 59"** with intervals of 1 second • **from 1'0 to 1'5** with intervals of 10 seconds For each interval, the display visualizes: - 1'1 → 1 minute and 10 seconds - ... - 1'5 → 1 minute and 50 seconds • **from 2' to 4'** with intervals of 1 minute	00 ... 59 1'0 ... 1'5 2' ... 4' 1'0
RP	**RP - Adjustment of partial opening measurement [%]** This parameter adjusts the percentage of partial opening in relation to the total opening of the automation. • **from 5% to 99 %** with intervals of 1 %	05 ... 99
TP	**TP - Setting of automatic closing time after partial opening [s]** It is set with different intervals of sensitivity. • **from 0" to 59"** with intervals of 1 second • **from 1'0 to 1'5** with intervals of 10 seconds For each interval, the display visualizes: - 1'1 → 1 minute and 10 seconds - ... - 1'5 → 1 minute and 50 seconds • **from 2' to 4'** with intervals of 1 minute	00 ... 59 1'0 ... 2' 2' ... 4' 1'0
TS	**TS - Setting of renewal of automatic closing time after photocells safety device release [%]** • **from 0 to 99%** with intervals of 1%. The count begins with the door fully open, (and the closing operation is performed even with automatic closure (AC) disabled. **WARNING:** automatic closure is not disabled on the third consecutive direction reversal. E.g.: • TC = 1' • TS = 50% • Renewal of automatic closing time= 30"	00 ... 99

AS	R1-R2	VA	OB	TA	TQ	TD	TU
SD	20	20	20	2.0	2.0	30	20
LS	20	20	20	2.0	2.0	30	20
TD	30	15	40	2.5	2.5	60	40

IP2450EN

PP - Setting of step-by-step sequence • **00** - Opening-Stop-Closing-Opening • **01** - Opening-Stop-Closing-Stop-Opening	00	01
WO - Setting of pre-flashing time on opening [s] Adjustment of the lead time for the switch-on of the flashing light and courtesy light, in relation to the start of the opening operation from a voluntary command. • **from 0" to 5"** with intervals of 1 second	00 ...	05
WC - Setting of pre-flashing time on closing [s] Adjustment of the lead time for the switch-on of the flashing light and courtesy light in relation to the start of the closing operation from a voluntary command. • **from 0" to 5"** with intervals of 1 second	00 ...	05
PK - Parking assistance (only with photocells installed) Once the door has opened and the car has passed through, the courtesy light flashes quickly 3 times when the photocells are disengaged to indicate that the door can be closed because the car is no longer in the passage opening. • **ON** – Enabled • **OF** – Disabled **NOTE:** it is recommended to install internal photocells	ON	OF

RA - Run Adjustment

The menu allows to adjust all the run parameters (opening/closure speed, slowdown positions, obstacle thrust sensibility etc.)

Parameter	Description	Selections available
	VA - Opening speed [cm/s] • **from 8 to 22 cm/s** with intervals of 1 cm/s (default value. Depends on AS setting)	08 ... 22
	VC - Closing speed [cm/s] • **from 8 to 22 cm/s** with intervals of 1 cm/s **WARNING:** the default value ensures the closing thrust force values return within the limits established by Standard EN12453. In case a higher closing speed is set it is not guaranteed the fulfillment of limits by Standard EN12453.	08 ... 22 10
	R1 - Adjustment of thrust on obstacles and motor current during opening [%] When the thrust exceeds the threshold, the system detects an obstacle and the movement is stopped. **00 -** Minimum thrust (minimum current delta for obstacle detection) **99 -** Maximum thrust (maximum current delta for obstacle detection) The threshold is calculated dynamically like a delta on the motor current measured during the opening stroke.	01 ... 99 20
	OB - Adjustment of deceleration distance during opening [cm] Indicates the deceleration distance before reaching the maximum open position. • **from 10 to 60 cm** with intervals of 1 cm (default value. Depends on AS setting)	10 ... 60
	PO - Adjustment of approach speed in opening [cm/s]. It indicates the speed from the end of the deceleration ramp to the end of the opening stroke • **from 5 to 15 cm/s** with intervals of 1 cm/s	05 ... 15 07
	CB - Adjustment of deceleration distance during closing [cm] Indicates the deceleration distance before reaching the closing position. • **from 20 to 60 cm** with intervals of 1 cm	20 ... 60 40
	VR - Setting of acquisition speed [cm/s] • **from 5 to 15 cm/s** with intervals of 1 cm/s	05 ... 15 06

	R2	**R2 - Adjustment of thrust on obstacles and motor current during closing [%]** When the thrust exceeds the threshold, the system detects an obstacle, and the movement is inverted. It has divided in two ranges with a different sensibility to give maximum flexibility according to needs: **from 00 to 40** – Soft thrust **from 41 to 99** – Strong thrust The threshold is calculated dynamically like a delta on the motor current measured during the closing stroke. **WARNING:** The default value ensures the closing thrust force values return within the limits established by Standard EN12453. Set different values to have stronger thrust force but in this case be aware that it is not guaranteed the fulfilment of limits by Standard EN12453. This operation must be carried out by qualified personnel.	01 ... 99 20
	PC	**PC - Adjustment of approach speed during closing [cm/s]** • **from 5 to 15 cm/s** with intervals of 1 cm/s **WARNING:** the default value ensures the closing thrust force values return within the limits established by Standard EN12453. In case a higher closing speed is set it is not guaranteed the fulfillment of limits by Standard EN12453.	05 ... 15 07
	TA	**TA - Adjustment of acceleration time during opening [s]** Regulates the slope of the acceleration ramp during opening • **from 0.5 to 9.9 s** with intervals of 0.1 s (default value. Depends on AS setting)	1.0 ... 9.9
	TQ	**TQ - Adjustment of acceleration time during closure [s]** Regulates the slope of the acceleration ramp during closing • **from 0.5 to 9.9 s** with intervals of 0.1 s (default value. Depends on AS setting)	1.0 ... 9.9
	TD	**TD - Adjustment of deceleration time during opening [%]** Regulates the slope of the deceleration ramp during opening. • **from 10 to 99 %** with intervals of 1 % (default value. Depends on AS setting)	1.0 ... 9.9
	TU	**TU - Adjustment of deceleration time during closure [%]** Regulates the slope of the deceleration ramp during closing. • **from 10 to 99 %** with intervals of 1 % (default value. Depends on AS setting)	1.0 ... 9.9
	DC	**DC - Setting of disengagement on stop during closure [mm]** Regulates the distance of the disengagement on the mechanical closing stop. • **00** – Disabled • **from 1 to 15 mm** with intervals of 1 mm	00 ... 30 10
	ST	**ST - Adjusting the inrush time [s]** • **from 0.5 to 3.0 s** with intervals of 1%	0.5 ... 3.0 1.5
	DT	**DT - Adjustment of obstacle recognition time [s/100]** • **from 10 to 60 s/100** with intervals of 1 s/100 **NOTE:** the parameter is adjusted in hundredths of a second **WARNING:** The default value ensures that the values of the closing thrust force return within the limits set by Standard EN12453. In case a higher value is set, compliance with the limits from the EN12453 Standard is not guaranteed.	0.5 ... 3.0 1.5
	RR	**RR - Resetting run calibration values** It permits to perform a new learning procedure. ENTER (2") → RR → ENTER (2") → -- → XX → L4	

IP2450EN

IO - Input/Output Configuration

The menu allows to configure the inputs/outputs functionalities of the automation.

Parameter	Description	Selections available
R9	**R9 - Configuration of input 1-9** • **NO**: disabled. • **9P**: open state of the input triggers permanent stop (default). • **9T**: open state of the input triggers temporary stop. Once contact closes, automatic closure time (if enabled) is activated.	NO 9P 9T
T5	**T5 - Terminal 5 operation mode** • **1-5** - Step-by-step • **1-3** - Opening	1-5 1-3
8	**8 - Selection of the device connected to terminals 1-8** • **NO** - None • **PH** - 4-wire photocells • **SP41** - Photocells with safety test • **SE** - Safety edge • **S41** - Safety edge with safety test • **P2** – 2-wire photocells with safety test S-PC • **PE** – Safety edge + 2-wire photocells with safety test S-PC • **PS** – Safety edge with safety test + 2-wire photocells with safety test S-PC	NO PH P41 SE S41 P2 PE PS
LP	**LP - Output function +LP-** • **01** - Electric lock (activated for a time defined by parameter LR) • **03** - ON-OFF flashing light without oscillator (active when the motor is in action) • **04** - ON-OFF flashing LED without oscillator (active when the motor is in action) • **05** - ON for flashing LED with internal oscillator • **08** - Closed automation (activated with door fully closed) • **09** - Automation open (activated with door fully open) • **13** - Maintenance alarm • **14** - Signal for batteries almost discharged • **ON** - Output always on	01 03 04 05 08 09 13 14 ON
LU	**LU - Courtesy light supplementary time setting [s].** It is set with different sensitivity ranges. • **NO** - Disabled • **from 01" to 59"** with intervals of 1 second • **from 1' to 2'** with intervals of 10 seconds • **from 2' to 4'** with intervals of 1 minute • **ON - Permanently activated** (deactivated by remote control or Wall Station) **NOTE:** The courtesy light comes on at the beginning of each operation and stays on at the end of the operation for the additional time selected.	NO 01 ... 59 10 ... 21 21 ... 41 ON
LG	**LG - Switch-on time for independently commanded courtesy light [min]** • **NO** - Disabled • **from 1' to 90'** with intervals of 1 minute • **ON** - Switched on and off with remote control or Wall-Station **NOTE:** the switching on of the light does not depend on the start of an operation but can be commanded separately using the remote-control.	NO 10 ... 90 ON
BR	**BR - Brightness level of the courtesy light** • **LO** - Low brightness • **MI** - Middle brightness • **HI** - High brightness	LO MI HI
LR	**LR - Electric lock release time [s]** If enabled, this indicates the electric lock activation time at the start of every opening operation with the automation closed. • **from 0.2 to 3.0 s** with intervals of 0.1 s	0.2 3.0 0.5

IO	ES	**ES - Energy-saving** • **ON** - Enabled (the red point on the right of the display flashes every 5 s). • **OF** - Disabled Energy-saving mode is activated after 5 minutes with the door closed, or when the door is idle and automatic closing is not enabled **NOTE:** the automation resumes its normal operation when a command is received on the radio board or following a terminals 1-5.	ON	OF
	WS	**WS - Setting of Wall-Station device** It is used to enable or disable the Wall-Station device. • **OF** - Wall-Station device is disabled • **ON** - Wall-Station device is enabled **WARNING:** the enabling of the Wall Station device will increase the power consumption; in this case be aware that it is not guaranteed the fulfilment of limits for standby consumption.	ON	OF
	BZ	**BZ - Buzzer enable/disable** • **ON** - Enabled • **OF** - Disabled	ON	OF

RO	RO	**RO - Radio and Connectivity Operations** The menu is used to manage all parameters for the radio/wireless functions of the control panel		
	Parameter	**Description**	**Selections available**	
	EP	**EP - Setting up encrypted radio transmission messages (AES 128bit mode and protected mode)** If the possibility to receive coded messages is enabled, the control panel will be compatible with remote controls of the "ENCRYPTED" type.	ON	OF
	SR	**SR - Remote control storage** ENTER → SR → OK → SR → ... x2, x3... → ESC By pressing ENTER, SR starts flashing and it is possible to associate the desired buttons. After OK is displayed, SR flashes again on the display and it is possible to associate the next button. To exit, press ESC or ENTER for 2 seconds and move on to the next item. **NOTE:** if the display shows NO flashing, the remote control may already be memorized.		
	RM	**RM - Radio receiver operation** • **1-5** - Step-by-step • **1-3** - Opening **NOTE:** this is the function associated to radio command when only one channel is stored (independently which one is).	1-5	1-3
	ER	**ER - Deletion of a single remote control** ENTER (2") → ER →		
	EA	**EA - Total memory deletion** ENTER (2") → EA (2" x2) → ENTER → OK It requires double confirm. Press ENTER for 2 seconds, release and press again for other 2 seconds.		

MU - Setting of the maximum number of remote controls that can be stored in the memory

You can store a maximum of 100 or 200 remote control codes.

ENTER → 10 o 20 → ENTER (2") → 10 o (20) → ENTER (2") → OK

- **20** - 200 remote controls that can be stored
- **10** - 100 remote controls that can be stored

WARNING: selecting MU → 20 (200 remote controls), the configurations U1 and U2 saved with the DF → SV command will be lost. This also applies for the last configuration reloaded with RL. In addition, new configurations cannot be saved on U1 and U2.

10 20

TX - Visualization of counter showing remote control stored

ENTER → 00 → 16 → 16 remote controls (example)

C1, C2, C3, C4 - Selection of CH1, CH2, CH3, CH4 function of stored remote control

- **NO** - No setting selected
- **1-3** - Opening command
- **1-4** - Closing command
- **1-5** - Step-by-step command
- **P3** - Partial opening command
- **LG** - Command to switch the courtesy light on/off
- **1-9** - STOP command

If even just one (any) CH key of the remote control is stored, the opening or stepby- step command is implemented.

NOTE: the 1-3 (opening) and 1-5 (step-by-step) options are available as alternatives, and depend on the selection of RM.

If 2-4 CH keys of a single remote control are stored, the functions matched in the factory with the CH keys are as follows:

- **CH1** = opening/step-by-step command
- **CH2** = partial opening command
- **CH3** =courtesy light on/off command
- **CH4** = STOP command

NO 1-3 1-4 1-5 P3 LG 1-9

FQ - Radio frequency selection

The visible parameters depend by the Remote Connectivity Board (RCB) plugged in (J9 connector).

- **NO** - None RCB plugged in
- **43** - Radio 433MHz (RCB50E plugged in)
- **86** - Radio 868MHz (RCB50E plugged in)

NO 43 86

VL - Enable/disable vacation mode.

Radio commands transmitted by radio frequency devices (radio controls and digital radio keypad) are disabled.

- **ON** - Holiday mode enabled: locks all remote control devices (radio frequency).
- **OF** – Holiday mode disabled: unlocks all remote control devices (radio frequency).

NOTE: If enabled, the display indicates VL whenever a radio command is received

ON OF

BT – Enable/disable Bluetooth®

- **ON** – Enabled
- **OF** - Disabled

ON OF

WF - Setting of WiFi functionality (future use)

It is used to enable or disable the WiFi functionality .

- **ON** - WiFi is enabled
- **OF** - WiFi is disabled

WARNING: enabling WiFi will increase the standby power consumption of the product

ON OF

WR - Request to restart the connected WiFi device (future use)

ENTER → OK
2"

NOTE: the item is present only if a WiFi device is connected.

MA - Deletion of mobile App control permissions (future use)

Diagnostic Functions

The menu allows to manage all other parameters used for additional services (diagnostic counters, FW updating, energy saving, etc.).

Parameter	Description	Selections available
AI	**AI - Automation model ID Info** It is read only parameter used by YALE Service, it gives just info about the automation model identification number.	
CU	**CU - Visualization of the firmware version on the control panel** ENTER → R. → 1.1 → Release 1.1 (example)	
AL	**AL - Alarm counter** Used to view, in sequence, the counters of alarms that have been triggered at least once (alarm code + number of times triggered). With DOWN and UP buttons, you can scroll through all the counters and see all the alarms recorded..	
AH	**AH - Alarm log** Used to view, in sequence, alarms that have been triggered (maximum 20). With DOWN and UP buttons, you can scroll through the entire alarm log. The display shows the alarm number and code, alternated. The highest number corresponds to the most recent alarm and the lowest number (0) corresponds to the oldest alarm.	
AR	**AR - Alarm reset** Resets all the alarms in the memory (counters and log). AR → ENTER → OK 2" **NOTE:** when the installation has been completed, you are advised to delete the alarms in order to facilitate future checks.	
RL	**RL - Loading of last configuration set** ENTER → RL → OK 2" The control panel automatically saves the last configuration set, and keeps it memorized in the storage module. In the event of a fault or the replacement of the control panel, the last configuration of the automation can be restored by inserting the storage module and loading the last configuration set.	
CV	**CV - Display of total manoeuvres counter** CV → ENTER → 00 → 01 → 82 →182 manoeuvres (example)	
CP	**CP - Display of partial manoeuvres counter** CP → ENTER → 00 → 07 → 16 →716 manoeuvres (example)	

ZP - Reset of partial manoeuvres counter

ZP → ENTER (2") → OK

For correct functioning, you are advised to reset the partial manoeuvres counter:
- after maintenance work;
- after setting the maintenance alarm interval.

CA - Setting the maintenance alarm (factory setting - alarm deactivated: 0.0 00. 00)

You can set the required number of manoeuvres (regarding the partial manoeuvres counter) for signaling the maintenance alarm.

⚠ **WARNING:** when the set number of operations is reached, the alarm message appears on the display V0.

OA - Selecting maintenance alarm display mode

- **00** - Visualization on display (alarm message V0)
- **01** - Visualization on flashing light (with the automation idle, 4 flashes are made and then repeated every hour) and on display (alarm message V0).

00 01

CH - Display of power supply hour counter

CH → ENTER → 0.0 → 02. → 15 →215 manoeuvres (example)

BH - Visualization of counter for power supply hours via battery

BH → ENTER → 0.0 → 02. → 15 →215 manoeuvres (example)

SV - Saving user configuration on control panel storage module

ENTER → U1 → UP; DOWN → U2 (esempio) → ENTER (2") → OK

U1 U2

⚠ **WARNING:** if the display visualizes flashing, the memory module may not be installed.

RC - Configuration loading

ENTER → U1 → UP; DOWN → U2 (esempio) → ENTER (2") → OK

U1 U2

It's possible to load the user configurations previously stored U1 and U2 on the memory module of the control panel.

IM - Motor current visualization

EL - Efficiency level of the automation

- This value can be used to evaluate the mechanical quality of the gate and to understand a suitable automation choice. In case of values lower than 90%, mechanical maintenance is recommended to restore efficiency or adoption of an automation with higher performance (e.g. motor with higher power).
- During normal use, this parameter monitors the efficiency of the automation, updating its degradation status in real time:
- **90-99%** High efficiency level, automation in excellent condition.
- **50%-89%** Medium efficiency level, performance starts to degrade.
- **10%-49%** Low efficiency level, performance is degraded, and maintenance required.

EU - Erasing of user configurations and last configuration set in the storage module

EU → ENTER (2") → EU → ENTER (2") → OK

BL - Visualization of Battery voltage level

The parameter shows the battery voltage level:

- **Lo** - Automation stopped. Battery voltage level is low (≤ 22 V)
- **22** - Battery voltage level ≥ 22 V and < 23 V
- **23** - Battery voltage level ≥ 23 V and < 24 V
- **24** - Battery voltage level ≥ 24 V and < 25 V
- **25** - Battery voltage level ≥ 25 V and < 26 V
- **26** - Battery voltage level ≥ 26 V and < 27 V
- **27** - Battery voltage level ≥ 27 V and < 28 V
- **28** - Battery voltage level ≥ 28 V

NOTE: the parameter is visible in the menu if the main power supply is missing and the battery kit is connected. In battery mode, when there is no power supply, the automation speed is reduced to a maximum of 15 cm/s

EN - Enable force detection test according EN 13241-1

EN → ENTER (2") → OK → EN

When enabled, the detection of consecutive obstacle is disabled to permit the execution of the force detection test according EN 13241-1.

WARNING: the activation of test mode has a timeout, after 60 minutes the test mode will be automatically disabled for safety reason.
This operation must be carried out by qualified personnel.

EN EN

UB - Door unbalanced level

It shows the level of the displacement.

- **from -99 to 99** with intervals of 1 unit.
- **Negative values**
  Right dot on the display is switched on: indicate an unbalanced during the closing maneuver (i.e. more power is requested during the closing).
- **Positive values**
  No dots switched on: indicate an unbalanced during the opening maneuver (i.e. more power is requested during the opening).
- **Acceptable door displacement**
  from 15 to 15

Example:

- from 50 to 26 → Door slightly unbalanced in closing
- from 75 to 51 → Door unbalanced in closing
- from 99 to 76 → Door very unbalanced in closing
- from 26 to 50 → Door slightly unbalanced in opening
- from 51 to 75 → Door unbalanced in opening
- from 76 to 99 → Door very unbalanced in opening

WARNING: in case of unbalanced door, verify if there are some obstruction or damage along the rail, otherwise the spring requires a new calibration.
This action must be performed by qualified personnel.

99 ... 99

RD - Resetting of factory settings

RD → ENTER (2") → RD → ENTER (2") → OK

18. Alarms and faults

NOTE: the visualization of alarms and faults is possible with any visualization selection. The signaling of alarm messages takes priority over all other displays.

Type of Alarm	Display	Description	Operation
Mechanical alarm	M0	**M0 - Automation is not properly selected**	Replace the control panel
	M3	**M3 - Automation blocked**	Check the mechanical parts
	M4	**M4 - Motor short circuit**	Check connection of motor
	M8	**M8 - Stroke too long**	Check the rack / chain belt
	M9	**M9 - Stroke too short**	Manually check that the gate moves freely
	MB	**MB - Absence of motor during a manoeuvre**	Check connection of motor
	MI	**MI - Detection of third consecutive obstacle**	Check for the presence of permanent obstacles along the stroke of the automation. Switch off and switch on again the system to reset the alarm. If the alarm persists call assistance service
	OD	**OD- Obstacle during opening**	Check for the presence of obstacles along the automation stroke
	OE	**OE - Obstacle during closing**	Check for the presence of obstacles along the automation stroke
	OF	**OF - Automation blocked on opening**	Check the mechanical parts and make sure there are no obstacles along the automation stroke
	OG	**OG - Automation blocked on closing**	Check the mechanical parts and make sure there are no obstacles along the automation stroke
Service alarm	HD	**HD - Power supply voltage is too high.** The system stops the motor to hold the door and avoid a falling during the closing	Check the spring and the mechanical, the door could be not more balanced
Internal control	V0	**V0 - Request for maintenance intervention**	Proceed with the scheduled maintenance intervention
Internal control	I7	**I7 - Internal parameter error - value outside limits**	Reset. If the problem persists, replace the control panel

Panel alarm	I8	I8 - Program sequence error	Reset. If the problem persists, replace the control panel
	IA	IA - Internal parameter error (EEPROM/ FLASH)	Reset. If the problem persists, replace the control panel
	IB	IB - Internal parameter error (RAM)	Reset. If the problem persists, replace the control panel
	IC	IC Operation time-out error (>5 min or >7 min in learning mode)	Manually check that the gate moves freely. If the problem persists, replace the control panel.
	IE	IE - Power supply circuit fault	Reset. If the problem persists, replace the control panel
	IM	IM - MOSFET alarm Motor in short circuit or always ON	Reset. If the problem persists, replace the control panel
	IN	IN - Interrupted motor power circuit (motor MOSFET open or always OFF)	Reset. If the problem persists, replace the control panel
	IR	IR - Motor relay error	Reset. If the problem persists, replace the control panel
	IS	IS - Error on motor current read circuit test	Reset. If the problem persists, replace the control panel
	TH	TH - Intervention of high temperature safety device	Do not carry out any operations. If the problem persists, contact Technical Service
	VH	VH - Automation blocked due to high temperature	Do not carry out any operations. If the problem persists, contact Technical Service
	XX	TXX - Firmware reset	
	WD	WD - Firmware reset not commanded	
	EN	EN - Error on the encoder during a manoeuvre	Check connection of motor
Radio operations alarm	R3	R3 - Storage module not detected	Insert a storage module
	R4	R4 - Storage module not compatible with the control panel	Insert a compatible storage module
	R5	R5 - No serial communication with the storage module	Replace the storage module
Battery alarm	B0	B0 - Battery almost flat	Check battery voltage. Replace battery

Power supply alarm	P0	P0 - No mains voltage	Check the control panel is powered correctly. Check the line fuse. Check the mains power supply
	P1	P1 - Microswitch voltage too low	Check the control panel is powered correctly
Accessory alarm	A7	A7 - Incorrect connection of terminal 9 to terminal 1	Check that terminal 1 and 9 are correctly connected
	A9	A9 - Overload on output +LP-	Check the device connected to output +LP- is working properly
	AB	AB - Courtesy Light short circuit	Check the connection. If the error persists replace the courtesy light
	AP	AP - Photocell short circuit or wires inverted	Check the connection
	PF	PF - Photocell test failed	Check the connection. If the error persists replace the photocell
	AW	AW - Wall station short circuit or wires inverted	Check the connection

19. YALE GO and YALE Home App

GO600 and GO1000 includes already the interface Wi-fi for YALE Home.
This is recognizable because the motor shows on the cover YALE ready

To configure motors in the YALE Home App, please follow the steps below:

1) Download the YALE Home App from the App store or Google Play store
2) Switch on Bluetooth function of your mobile device
3) Follow the advice on the App
4) Scan QR code outside the product when prompted

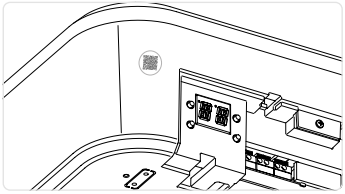

20. Maintenance

Six-monthly maintenance activities

- Check the emergency release is working properly.
- Check the safety devices (if installed) are working properly.
- Check the obstacle detection function is working properly.
- Check the stability of the automation

Disconnect the power supply, 230 V~:

- Lubrication of mechanical parts must be performed with door down.
- Make sure that cable and spring breakage device is in perfect working order.
- Check lift-cable wear.
- Make sure that the cables run smoothly in the drums.
- Periodically grease the hinges, ball-bearings, wheel pins, and torsional springs.
- Check for any obstacles that may hinder the wheels from properly running in the guides.
- To check the correct balancing of the sectional automation.
- Make sure that the overhead sliding structure is firmly fastened to the ceiling and perfectly free from any defects, bending or buckling.
- Make sure that there are no loose bolts or screws.
- Absolutely avoid making any changes to the hoisting and/or sliding system.

Connect the power supply (230 V~) and check that:

- Limit switches are working properly.
- All control and safety functions are in good working order.

The Bluetooth® word mark and logos are registered trademarks owned by Bluetooth SIG, Inc. and any use of such marks by ASSA ABLOY Entrance Systems AB is under license.

All the rights concerning this material are the exclusive property of ASSA ABLOY Entrance Systems AB. Although the contents of this publication have been drawn up with the greatest care, ASSA ABLOY Entrance Systems AB cannot be held responsible in any way for any damage caused by mistakes or omissions in this publication. We reserve the right to make changes without prior notice. Copying, scanning or changing in any way is expressly forbidden unless authorised in writing by ASSA ABLOY Entrance Systems AB.

The crossed-out wheelie bin symbol indicates that the product should be disposed of separately from normal household waste. The product should be recycled in accordance with local environmental regulations for waste disposal. By separating a product marked with this symbol from household waste, you will help reduce the volume of waste sent to incinerators or land-fill and minimise any potential negative impact on human health and the environment.

ASSA ABLOY Entrance Systems AB
Lodjursgatan 10
SE-261 44, Landskrona
Sweden
© ASSA ABLOY